MANUAL FOR

SEWER EXTENSION CONSTRUCTION

SUSQUEHANNA TOWNSHIP AUTHORITY

of

DAUPHIN COUNTY, PENNSYLVANIA

DECEMBER 2002

CET ENGINEERING SERVICES
1240 NORTH MOUNTAIN ROAD
HARRISBURG, PENNSYLVANIA 17112

Amendment No. 1
(As Amended at the March 1, 2005 Authority Board Meeting)

Delete Paragraph 1.05 of Section 01720 in its entirety and insert the following in its place:

1.05 SUBMITTALS

A. Record Drawings:

1. Before the work will be accepted by the AUTHORITY, submit AUTOCAD format digital file (after final approval), reproducible mylars (after final approval) and two (2) copies of all working Drawings, modified as necessary to show the facilities as constructed.

2. The AUTHORITY intends to use prints of the reproducibles to provide information to designers and contractors as required by the Commonwealth of Pennsylvania Underground Utilities Act 287 and its amendments thereto.

3. A checklist for record drawings is provided on the following page. At a minimum, the DEVELOPER shall comply with items on the checklist. The AUTHORITY reserves the right during the review process to request changes or modifications to the drawings that make the plan clear and legible.

4. Record drawings shall indicate:

5. Sheet size 24” x 36”

6. Lot lines and lot number adjacent to sewer easement or roadway.

7. All information as identified in the ‘Record Drawings Technical Review Checklist’ at the end of Section 01720.

8. All manhole numbers as provided by the AUTHORITY

9. Plans & Profiles indicating as-built conditions including other utilities, right-of-way lines, edges of roadway, property lines, etc. labeled “Record Drawings.”

10. Provide on the drawings a table indicating lateral and stub stationing, distance from mainline to end of lateral at edge of right-of-way, and depth of lateral at edge of right-of-way.

11. Provide copies in accordance with Agreement.

PREFACE

The specifications contained in this document (Manual for Sewer Extension Construction, dated December 2002, Susquehanna Township Authority, Dauphin County, Pennsylvania) and as amended from time to time, meet or exceed the requirements of the International Plumbing Code (IPC) and the International Residential Code (IRC) for installation of service laterals and building sewers located on either public or private property. If a subject contained in either the IPC or IRC is not specifically addressed in this document, the requirements of the IPC or IRC are to be applied.

This technical manual is provided by Susquehanna Township Authority for use by Developers and their contractors for design and construction of sanitary sewers and appurtenances within the Authority's service area. These standards must be followed in design development and construction.
Use of this document for any other purpose other than preparation of plans for submittal to Susquehanna Township Authority or for construction of sanitary sewers in the Authority's service area is forbidden.

PROJECT MANUAL

TABLE OF CONTENTS

MANUAL

CONTRACT SPECIFICATIONS

APPENDIX

DOCUMENT 00700

GENERAL CONDITIONS

ARTICLE 1 - DEFINITIONS

Wherever used in these General Conditions or in the manual for Sewer Construction the following terms have the meanings indicated which are applicable to both the singular and plural thereof:

AGREEMENT - The written agreement between OWNER and DEVELOPER covering the Work to be performed.

DETAIL DRAWINGS - The detailed construction drawing provided in the Manual for Sewer Extension Construction.

DEVELOPER - The person, firm or corporation, ultimately responsible for construction of the sewer with whom OWNER has entered into the Agreement, as well as agents acting on behalf of DEVELOPER, including the DEVELOPER'S CONTRACTOR.

DEVELOPER'S CONTRACTOR - The person, firm or corporation constructing the sewer extension on behalf of DEVELOPER, if other than Developer.

DEVELOPER Drawings - The drawings which show the character and scope of the Work to be performed and which have been prepared by DEVELOPER and approved by ENGINEER and are referred to in the Sewer Extension Agreement.

ENGINEER - The independent consulting engineer with whom the Susquehanna Township Authority has contracted to review and observe the DEVELOPER’S design, installation and completion of any sewer extension.

General Requirements - Sections of Division 1 of the MANUAL.

Laws and Regulations: Laws or Regulations - Laws, rules, regulations, ordinances, codes and/or orders of Susquehanna Township Authority, Dauphin County, Commonwealth of Pennsylvania, and United States of America.

MANUAL (or Manual) - The Manual for Sewer Extension Construction

OWNER - The Susquehanna Township Authority, also referred to as the AUTHORITY.

Project - The total construction of the sanitary sewer extension.

Project FIELD REPRESENTATIVE - The authorized representative of the OWNER or ENGINEER assigned to the site or any part thereof for observation of construction.

Shop Drawings - All drawings, diagrams, illustrations, schedules and other data which are specifically prepared by or for DEVELOPER to illustrate some portion of the Work and all illustrations, brochures, standard schedules, performance charts, instructions, diagrams and other information prepared by a Supplier and submitted by DEVELOPER to illustrate material or equipment for some portion of the Work.

Specifications - Those portions of the Manual consisting of written technical descriptions of materials, equipment, construction systems, standards and workmanship as applied to the Work and certain administrative details applicable thereto.

Substantial Completion - The Work (or a specified part thereof) has progressed to the point where, in the opinion of ENGINEER as evidenced by ENGINEER's definitive letter of Substantial Completion, it is sufficiently complete, in accordance with the Manual so that the Work (or specified part) can be utilized for the purposes for which it is intended.

Supplier - A manufacturer, fabricator, supplier, distributor, material man or vendor.

Underground Facilities - All pipelines, conduits, ducts, cables, wires, manholes, vaults, tanks, tunnels or other such facilities or attachments, and any encasements containing such facilities which have been installed underground to furnish any of the following services or materials: electricity, gases, steam, liquid petroleum products, telephone or other communications, cable television, sewage and drainage removal, traffic or other control systems or water.

Work - The entire completed construction of the sewer extension or the various separately identifiable parts thereof required to be furnished under the Manual. Work is the result of performing services, furnishing labor and furnishing and incorporating materials and equipment into the construction, all as required by the Manual.

ARTICLE 2 - PRELIMINARY MATTERS

Before Starting Construction:

2.0 The DEVELOPER must obtain a construction permit from the Susquehanna Township Authority.

2.1. The DEVELOPER must provide 10 days prior notification before undertaking the project.

Preconstruction Conference:

2.2. At least 10 days prior to construction, but before the DEVELOPER's CONTRACTOR starts the Work at the site, a conference attended by the DEVELOPER, DEVELOPER's CONTRACTOR, OWNER, ENGINEER and others as appropriate will be held to discuss procedures for handling Shop Drawings and other submittals, and to establish a working understanding among the parties as to the Work.

ARTICLE 3 - DEVELOPER'S RESPONSIBILITIES

Supervision and Superintendence:

3.1. DEVELOPER's shall supervise and direct the Work competently and efficiently, devoting such attention thereto and applying such skills and expertise as may be necessary to perform the Work in accordance with the Manual. DEVELOPER shall be solely responsible for the means,

methods, techniques, sequences and procedures of construction. DEVELOPER shall be responsible to see that the finished Work complies accurately with the Manual.

3.2. DEVELOPER shall keep on the Work at all times during its progress a competent resident superintendent. The superintendent will be DEVELOPER's representative at the site and shall have authority to act on behalf of DEVELOPER. All communications given to the superintendent shall be as binding as if given to DEVELOPER.

Labor, Materials and Equipment:

3.3. DEVELOPER shall provide competent, suitably qualified personnel to survey and layout the Work and perform construction as required by the Manual. DEVELOPER shall at all times maintain good discipline and order at the site. Except in connection with the safety or protection of persons or the Work or property at the site or adjacent thereto, and except as otherwise indicated in the Manual, all Work at the site shall be performed during regular working hours, and DEVELOPER will not permit overtime work or the performance of Work on Saturday, Sunday or any legal holiday without Owner's written consent given after prior written notice.

3.4. All materials and equipment shall be of good quality and new, except as otherwise provided in the Manual. If required by ENGINEER, DEVELOPER shall furnish satisfactory evidence (including reports of required tests) as to the kind and quality of materials and equipment. All materials and equipment shall be applied, installed, connected, erected, used, cleaned and conditioned in accordance with the instructions of the applicable Supplier except as otherwise provided in the Manual; but no provision of any such instructions will be effective to assign to ENGINEER, or any of ENGINEER's consultants, agents or employees, any duty or authority to supervise or direct the furnishing or performance of the Work or any duty or authority to undertake responsibility contrary to the provisions of paragraph 5.7.

Substitutes or "Or-Equal" Items:

3.5.1. Whenever materials or equipment are specified or described in the Manual by using the name of a proprietary item or the name of a particular Supplier the naming of the item is intended to establish the type, function and quality required. Unless the name is followed by words indicating that no substitution is permitted, materials or equipment of other Suppliers may be accepted by ENGINEER if sufficient information is submitted by DEVELOPER to allow ENGINEER to determine that the material or equipment proposed is equivalent or equal to that named. Requests for review of substitute items of material and equipment will not be accepted by ENGINEER from anyone other than DEVELOPER. If DEVELOPER wishes to furnish or use a substitute item of material or equipment, DEVELOPER shall make written application to ENGINEER for acceptance thereof, certifying that the proposed substitute will perform adequately the functions and achieve the results called for by the general design, be similar and of equal substance to that specified and be suited to the same use as that specified.

3.5.2. If a specific means, method, technique, sequence or procedure of construction is indicated in or required by the Manual, DEVELOPER may furnish or utilize a substitute means, method, sequence, technique or procedure of construction acceptable to ENGINEER, if DEVELOPER submits sufficient information to allow ENGINEER to determine that the substitute proposed is equivalent to that indicated or required by the Contract Documents. The procedure for review by ENGINEER will be similar to that provided in paragraph 3.5.1 as applied by ENGINEER.

3.5.3. ENGINEER will be allowed a reasonable time within which to evaluate each proposed substitute. ENGINEER will be the sole judge of acceptability, and no substitute will be ordered, installed or utilized without ENGINEER's prior written acceptance, which will be evidenced by an approved Shop Drawing. OWNER may require DEVELOPER to furnish at DEVELOPER's expense a special performance guarantee or other surety with respect to any substitute. ENGINEER will record time required by ENGINEER and ENGINEER's consultants in evaluating substitutions proposed by DEVELOPER and in making changes in the Manual occasioned thereby. Whether or not ENGINEER accepts a proposed substitute, DEVELOPER shall reimburse OWNER for the charges of ENGINEER and ENGINEER's consultants for evaluating each proposed substitute.

Record Documents:

3.6. DEVELOPER shall maintain in a safe place at the site one record copy of all Drawings, Specifications, Addenda, Written Amendments, Change Orders, Work Directive Changes, Field Orders and written interpretations and clarifications (issued pursuant to paragraph 5.4) in good order and annotated to show all changes made during construction. These record documents together with all approved samples and a counterpart of all approved Shop Drawings will be available to ENGINEER for reference. Upon completion of the Work, these record documents, samples and Shop Drawings will be delivered to ENGINEER or OWNER.

Shop Drawings and Samples:

3.7. After checking and verifying all field measurements and after complying with applicable procedures specified in the General Requirements, DEVELOPER shall submit to ENGINEER for review and approval, five copies (unless otherwise specified in the General Requirements) of all Shop Drawings, which will bear a stamp or specific written indication that DEVELOPER has satisfied DEVELOPER's responsibilities under the Manual with respect to quantities, dimensions, specified performance and design criteria, materials and similar data to enable ENGINEER to review the information as required.

3.8. ENGINEER will review and approve with reasonable promptness Shop Drawings and samples, but ENGINEER's review and approval will be only for conformance with the design concept of the Project and for compliance with the information given in the Manual and shall not extend to means, methods, techniques, sequences or procedures of construction (except where a specific means, method, technique, sequence or procedure of construction is indicated in or required by the Manual) or to safety precautions or programs incident thereto. The review and approval of a separate item as such will not indicate approval of the assembly in which the item functions. DEVELOPER shall make corrections required by ENGINEER, and shall return the required number of corrected copies of Shop Drawings and submit as required new samples for review and approval. DEVELOPER shall direct specific attention in writing to revisions other than the corrections called for by ENGINEER on previous submittals.

3.9. ENGINEER's review and approval of Shop Drawings or samples shall not relieve DEVELOPER from responsibility for any variation from the requirements of the Manual unless DEVELOPER has in writing called ENGINEER's attention to each such variation at the time of submission as required by paragraph 3.7 and ENGINEER has given written approval of each such variation by a specific written notation thereof incorporated in or accompanying the Shop Drawing or sample approval; nor will any approval by ENGINEER relieve DEVELOPER from responsibility for errors or omissions in the Shop Drawings or from responsibility for having complied with the provisions of paragraph 3.7.

3.10. Where a Shop Drawing or sample is required by the Manual, any related Work performed prior to ENGINEER's review and approval of the pertinent submission will be the sole responsibility of DEVELOPER and may subject to rejection.

ARTICLE 4 - OWNER'S RESPONSIBILITIES

4.1. AUTHORITY's responsibility in respect of certain observations, tests and approvals is set forth in paragraph 7.4.

ARTICLE 5 - OWNER'S/ENGINEER'S STATUS DURING CONSTRUCTION

Owner's Representative:

5.1. ENGINEER will be OWNER's representative during the construction period, but does not have the power to bind the owner to any financial or other legal obligations whatsoever.

Visits to Site:

5.2. As may be directed by OWNER, ENGINEER will make visits to the site at intervals appropriate to the various stages of construction to observe the progress and quality of the executed Work and to determine, in general, if the Work is proceeding in accordance with the Manual. ENGINEER will not be required to make exhaustive or continuous on-site observations to check the quality or quantity of the Work. ENGINEER's efforts will be directed toward providing for OWNER a greater degree of confidence that the completed Work will conform to the Manual. On the basis of such visits and on-site observations as an experienced and qualified design professional, ENGINEER will keep OWNER informed of the progress of the Work and will endeavor to guard OWNER against defects and deficiencies in the Work.

Project FIELD REPRESENTATIVE:

5.3. ENGINEER or OWNER may provide a project FIELD REPRESENTATIVE to observe the performance of the work. Observation shall be provided solely for the purpose and to the extent necessary to insure conformance with the Manual construction requirements. Such observation, of itself, shall not constitute any approval, expressed or implied, of any deviation from the specifications, drawings, Manual requirements or good practice, and/or impose any liability whatsoever upon the FIELD REPRESENTATIVE, ENGINEER, or OWNER.

Authorized Variations in Work:

5.4. ENGINEER may authorize minor variations in the Work from the requirements of the Manual only in accordance with the procedures described in Section 01153 of the Project Manual.

Rejecting Defective Work:

5.5. FIELD REPRESENTATIVE or ENGINEER will have authority to disapprove or reject Work which FIELD REPRESENTATIVE or ENGINEER believes to be defective, and will also have authority to require special observation or testing of the Work as provided in paragraph 7.9 whether or not the Work is fabricated, installed or completed.

Shop Drawings:

5.6. In connection with ENGINEER's responsibility for Shop Drawings and samples, see paragraphs 3.7 through 3.10 inclusive.

5.7. ENGINEER will not be responsible for DEVELOPER's means, methods, techniques, sequences or procedures of construction, or the safety precautions and programs incident thereto, and ENGINEER will not be responsible for DEVELOPER's failure to perform or furnish the Work in accordance with the Manual.

5.8. ENGINEER will not be responsible for the acts or omissions of DEVELOPER or of DEVELOPER's CONTRACTOR, any Supplier, or of any other person or organization performing or furnishing any of the Work.

ARTICLE 6 - CHANGES IN THE WORK

6.1. All changes in project shall be in accordance with Section 01153 of the General Requirements.

ARTICLE 7 - WARRANTY AND GUARANTEE; TESTS AND OBSERVATIONS; CORRECTION, REMOVAL OR ACCEPTANCE OF DEFECTIVE WORK

7.1. DEVELOPER warrants and guarantees to OWNER and ENGINEER that all Work will be in accordance with the Manual and Agreement and will not be defective. Prompt notice of all defects shall be given to DEVELOPER. All defective Work, whether or not in place, may be rejected, corrected or accepted as provided in this Article.

Access to Work:

7.2. ENGINEER and FIELD REPRESENTATIVE, other representatives of OWNER, testing agencies and governmental agencies with jurisdictional interests will have access to the Work at reasonable times for their observation and testing. DEVELOPER shall provide proper and safe conditions for such access.

Tests and Observations:

7.3. DEVELOPER shall give ENGINEER timely notice of readiness of the Work for all required observations, tests or approvals.

7.4. If Laws or Regulations of any public body having jurisdiction require any Work (or part thereof) to specifically be observed, tested or approved, DEVELOPER shall assume full responsibility therefore, pay all costs in connection therewith and furnish ENGINEER the required certificates of observation, testing or approval. DEVELOPER shall also be responsible for and shall pay all costs in connection with any observation or testing required in connection with OWNER's or ENGINEER's acceptance of a Supplier of materials or equipment proposed to be incorporated in the Work, or of materials or equipment submitted for approval prior to DEVELOPER's purchase thereof for incorporation in the Work.

7.5. All observations, tests or approvals other than those required by Laws or Regulations of any public body having jurisdiction shall be performed by organizations acceptable to OWNER and DEVELOPER (or by ENGINEER if so specified).

7.6. If any Work (including the work of others) that is to be observed, tested or approved is covered without concurrence of ENGINEER, it must, if requested by ENGINEER, be uncovered for observation. Such uncovering shall be at DEVELOPER's expense unless DEVELOPER has given ENGINEER timely notice of DEVELOPER's intention to cover the same and ENGINEER has not acted with reasonable promptness in response to such notice.

7.7. Neither observations by ENGINEER or FIELD REPRESENTATIVE nor observations, tests or approvals by others shall relieve DEVELOPER from DEVELOPER's obligations to perform the Work in accordance with the Manual.

Uncovering Work:

7.8. If any Work is covered contrary to the request of FIELD REPRESENTATIVE or ENGINEER, it must, if requested by ENGINEER, be uncovered for ENGINEER's observation and replaced at DEVELOPER's expense.

7.9. If FIELD REPRESENTATIVE or ENGINEER considers it necessary or advisable that covered Work be observed by ENGINEER or observed or tested by others, DEVELOPER, at ENGINEER's request, shall uncover, expose or otherwise make available for observation or testing as ENGINEER may require, that portion of the Work in question, furnishing all necessary labor, material and equipment.

Correction or Removal of Defective Work:

7.10. If required by FIELD REPRESENTATIVE or ENGINEER, DEVELOPER shall promptly, as directed, either correct all defective Work, whether or not fabricated, installed or completed, or, if the Work has been rejected by ENGINEER, remove it from the site and replace it with non-defective Work. DEVELOPER shall bear all direct, indirect and consequential costs of such correction or removal (including but not limited to fees and charges of engineers, architects, attorneys and other professionals) made necessary thereby.

Division 1

General Requirements

SECTION 01010 - SUMMARY OF WORK

PART 1 GENERAL

1.01 REQUIREMENTS INCLUDED

A. Title of Work.

B. Work Sequence.

C. Minimum Design Standards.

1.02 RELATED REQUIREMENTS

A. General Conditions:

B. Section 01040 - Project Coordination.

1.03 WORK COVERED BY MANUAL FOR SEWER EXTENSION CONSTRUCTION

A. Manual covers OWNER's requirements for construction of sanitary sewer extensions by developers for ultimate dedication to the OWNER.

1.04 MINIMUM DESIGN STANDARDS

A. All sanitary sewers shall be PVC or DIP.

B. Sanitary sewer mains shall be a minimum of 8-inches in diameter.

C. Service laterals shall be a minimum of 6-inches in diameter.

D. All house and/or building laterals may be 4-inches or 6-inches. In addition, laterals serving buildings with more than 5 EDU’s shall be a minimum of 6-inches.

E. All laterals, associated with new main line construction, shall be connected to the main line sewer by means of a WYE connection or sanitary TEE. When connecting to existing sewer mains with a lateral the connection shall be made to the existing WYE, if provided. If a WYE connection has not been provided, connection shall be made in accordance with the standard details. The use of tapping saddles to facilitate a lateral connection must be approved by the Authority prior to installation.

F. All terminal manhole runs shall have a minimum slope of 1.0 percent. All other manhole runs shall have a minimum slope of 0.5 percent. If for some reason the site conditions do not permit this slope, approval must be obtained on a case-by-case basis.

G. A minimum of five (5) feet of cover should be provided over all gravity sanitary sewers and a minimum of four (4) feet for force mains and laterals.

H. All manholes shall have an IN & OUT invert. The minimum drop across the bottom of a manhole shall be one tenth (0.1) of a foot. When sewers have a slope of 4 percent to 9 percent the drop across the manhole shall be four (4) inches. When sewers have a slope of 9 percent to 20 percent the drop across the manhole shall be six (6) inches. For sewers with a slope greater than 20 percent the drop across the manhole shall be twelve (12) inches.

I. The maximum manhole run shall be 400 feet in length.

J. Lateral connections to manholes are not normally allowed. However, if laterals are to be connected to manholes, the invert of the lateral shall be a minimum of three tenths (0.3) of a foot above the out invert.

K. All manholes shall be numbered in accordance with the Authority's numbering system as provided to the DEVELOPER by the Authority's engineer at the time of initial review of the plans.

L. All sanitary sewers and force mains should be located within the road rights-of-way. Where sanitary sewers and force mains cannot be located within the road rights-of-way a 30-foot wide (minimum) right-of way shall be provided. The sanitary sewer and/or force main shall be located in the center of said right-of-way.

M. Manholes, which are located in grassed areas, shall have a minimum top elevation of 1 foot above the existing and/or proposed grade. Manholes located in grassed areas that are in residential grassed areas may be placed at existing and/or proposed grade.

N. All pumping station and grinder pump design criteria and construction details shall be submitted for review and approval. These details shall also be shown on the construction drawings.

O. Flat top manholes shall be used when less than five feet of cover is provided over the top of the sanitary sewer pipe.

P. All standard details for construction shall be shown on the plans.

1.05 CONTRACT METHOD

A. Construct the Work in accordance with the plans approved by the OWNER.

PART 2 PRODUCTS

Not Used.

PART 3 EXECUTION

Not Used.

END OF SECTION 01010

Design Checklist for
Sanitary Sewer Extensions

Job Number _____
Developer _____
Development _____
Date _____
Submittal No. _____

Item Number	Item	Acceptable	Unacceptable
1	Base Datum on existing sewers		
2	Note on each Drawing "All materials used and construction methods employed are to be in accordance with the latest standards of the Susquehanna Township Authority."		
3	Note on Drawings "For sewer detail drawings reference Standard Construction and Material Specifications, Susquehanna Township Authority."		
4	Note on Drawings "Contractor shall test pit all existing utility crossings prior to installing any sanitary sewer pipe to verify existing horizontal and vertical elevations to assure no conflict with new sewer."		
5	Note on Drawings when sewer is installed through Authority rights of way including planter 'islands', "No trees, landscape walls, etc. shall be installed within limits easement in accordance with the Authority's standard Deed of Dedication."		
6	Name of Engineer		
7	Seal of Engineer		
8	Signature of Engineer		
9	Name of Development and Owner		
10	Water Quality Permit Number on Drawings, or if none required then WQP number of sewer connecting to		
11	Act 287 Utility List and Serial Number		
12	Index Map (1"=400') indicating:		
12.1	Sewer Other than 8-inch		
12.2	Names of Streets		
12.3	Manhole Numbering		
12.4	Existing MH labels		

13	Location of building(s) and lots	_____	_____
14	Note indicating those lots not having basement service	_____	_____
15	Elevation of Basements shown on Plan or if no basement service then show first floor elevation	_____	_____
16	Plan view 1"=50 ' Profile 1"=10'	_____	_____
17	Min. Cover of 5’	_____	_____
18	Minimum manhole height with standard 4' diam. manhole and 8" pipe is 5.1 feet. If flattop manhole is necessary, verify necessary minimum height.	_____	_____
19	Minimum slope across manhole 0.1 feet	_____	_____
20	Check Prefix and number system	_____	_____
21	Check for clearance with water (10’)	_____	_____
22	Check for horizontal clearance with storm sewer (5’)	_____	_____
23	Do the plans indicate Electric to be installed in the sewer easement? Min distance = 5'	_____	_____
24	Right-of-way - 30’ (min.)	_____	_____
25	Constructability	_____	_____
26	Maintenance	_____	_____
27	Max. Run length of **400’**	_____	_____
28	Placement of manholes on street. Are they in the wheel path?	_____	_____
29	Placement of manholes in parking lots. Are they in the parking space?	_____	_____
30	Min. Slope of 0.5% for 8-inch pipe	_____	_____
31	Terminal Run Min. Slope of 1.0%	_____	_____
32	Invert Ins, Invert Outs, Rim Inverts shown on Dwgs	_____	_____
33	Lateral Stationing from downstream manhole	_____	_____
34	Size of Laterals Shown, should be 6-inch	_____	_____

35	Lateral Length		
36	Inside/Outside drops are required for inverts greater than 24-inches		
37	If steep slopes (4% to 9%), are the inverts across manholes shall be 4-inches for constructability		
38	If steep slopes (9% to 20%), are the inverts across manholes shall be 6-inches for constructability		
39	If steep slopes (greater than 20%), are the inverts across manholes shall be 12-inches for constructability		
40	Verify depth of sewer doesn’t exceed Authority requirements		
41	Where there is fill beneath proposed sewer, use ductile iron pipe.		
42	If sewer depth is greater than 18 feet, use DIP.		
43	Sheet Size 24 by 36		
44	Revision Date Shown		
45	Phasing of sanitary sewer should indicate the last sewer section installed to extend 1 manhole run beyond current phase being constructed		
46	Correct slopes and lengths		
47	Curb cuts when sewer extends off of streets		
48	Is a right-of-way gate needed?		
46	If on-lot grinder pumps are needed, does the design comply with the Specifications?		
47	Indicate those manholes that require watertight covers		
48	If private sewer extension, indicate "Private Sewer" on cover		
49	Indicate all utilities on the plans and profiles		
50	10' separation between water services and laterals		
51	Existing sewers to be abandoned shall be filled with flowable fill		
52	Is a grease trap required? What size?		
53	Is planning module approval shown on drawings?		

SECTION 01040 - PROJECT COORDINATION

PART 1 GENERAL

1.01 REQUIREMENTS INCLUDED

A. Coordination of Work of Contract.

1.02 RELATED REQUIREMENTS

A. Section 01010 - Summary of Work.

B. Section 01701 - Project Closeout Procedures: Closeout submittals.

C. Section 01060 - Field Access in Rights-of-Way.

1.03 DESCRIPTION

A. Coordinate scheduling, submittals, and work of the various sections of Specifications to assure efficient and orderly sequence of installation of construction elements.

1.04 MEETINGS

A. Hold coordination meetings and pre-construction conferences with OWNER, ENGINEER, PROJECT FIELD REPRESENTATIVE, and other necessary personnel to assure coordination of Work

1.05 COORDINATION OF SUBMITTALS

A. Schedule and coordinate submittals specified in Section 01340.

B. Coordinate work of various sections having interdependent responsibilities for installing, connecting to, and placing in service, such materials.

1.06 COORDINATION WITH OWNER AND ENGINEER

A. Notify OWNER 10 days in advance of beginning work in a work area.

B. Cooperate with OWNER to keep existing facilities in service during construction.

1.07 COORDINATION OF PROJECT CLOSEOUT

A. Assemble and coordinate closeout submittals specified in Section 01701.

1.08 COORDINATION OF UTILITIES AND OTHER OWNERS

A. Prior to beginning construction, inform all public service companies, individuals, and others owning or controlling any facilities or structures within the project, which may be affected by the Work that it will commence on a certain date.

B. DEVELOPER's attention is directed to the provisions of Pennsylvania General Assembly Underground Utility Line Protection Act and all other related local, state and federal statutes, rules, ordinances and regulations as they may apply to the work under this project. DEVELOPER shall have complete responsibility for compliance with the Pennsylvania General Assembly Underground Utility Line Protection Act and all other related local, state and federal statutes, rules, ordinances and regulations.

C. In accordance with the PA General Assembly Underground Utility Line Protection Acts, where the proposed facilities cross telephone, telegraph or electric cables, gas, oil or water lines, sewers, or other facilities, it shall be the responsibility of DEVELOPER to give the owner of the facility due notice of the proposed crossing to permit the owner of the affected facility time to send a field representative to the site to mark, guard, or protect the facility if the owner of the affected facility so desires. DEVELOPER shall cooperate with facility owners by arranging and performing work in and around such facilities; to facilitate their relocation, preservation or reconstruction, as may be required. In addition, the DEVELOPER shall obtain names of persons to contact if damage should occur during construction operations.

PART 2 PRODUCTS

Not Used.

PART 3 EXECUTION

Not Used.

END OF SECTION 01040

SECTION 01050 - FIELD ENGINEERING

PART 1 GENERAL

1.01 REQUIREMENTS INCLUDED

A. DEVELOPER is responsible to provide and pay for all field-engineering services required for Project.

1. Survey work required in execution of Project.

2. Civil, structural or other professional engineering services specified, or required to execute DEVELOPER's construction methods.

1.02 RELATED REQUIREMENTS

A. Conditions of the Project.

B. Section 01010 - Summary of Work.

C. Section 01720 - Project Record Documents.

1.03 QUALIFICATIONS OF SURVEYOR OR ENGINEER

A. Qualified engineer or registered land surveyor, acceptable to DEVELOPER and OWNER.

PART 2 PRODUCTS

Not Used.

PART 3 EXECUTION

Not Used.

END OF SECTION 01050

SECTION 01060 - FIELD ACCESS IN RIGHTS-OF-WAY

PART 1 GENERAL

1.01 REQUIREMENTS INCLUDED

A. DEVELOPER shall be responsible for obtaining access to existing sanitary sewers and manholes located in rights-of-way.

1.02 RELATED REQUIREMENTS

A. Section 01720 - Project Record Documents.

B. Section 01040 - Project Coordination.

1.03 SEWER AND MANHOLE LOCATIONS

A. Existing sanitary sewers and manhole locations are as designated on Drawings by DEVELOPER.

B. Locate and identify all rights-of-way, access roads and manholes prior to starting work.

PART 2 PRODUCTS

Not Used.

PART 3 EXECUTION

Not Used.

END OF SECTION 01060

SECTION 01090 - REFERENCE STANDARDS

PART 1 GENERAL

1.01 REQUIREMENTS INCLUDED

A. Applicability of Reference Standards.

B. Provision of Reference Standard at site.

C. Acronyms used in Manual for Reference Standards. Source of Reference Standards.

1.02 RELATED REQUIREMENTS

A. General Conditions of the Project: Reference Standards.

1.03 QUALITY ASSURANCE

A. For products or workmanship specified by association, trade, or Federal Standards, comply with requirements of the standard, except when more rigid requirements are specified or are required by applicable codes.

B. The date of the standard that is in effect as of the Agreement date.

C. When required by individual Specification section, obtain copy of standard. Maintain copy at jobsite during submittals, planning, and progress of the specific work, until Substantial Completion.

1.04 SCHEDULE OF REFERENCES

AA Aluminum Association
818 Connecticut Avenue, N.W.
Washington, DC 20006

AASHTO American Association of State Highway
and Transportation Officials
444 North Capitol Street, N.W.
Washington, DC 20001

ACI American Concrete Institute
Box 19150
Reford Station
Detroit, MI 48219

AISC American Institute of Steel Construction
1221 Avenue of the Americas
New York, NY 10020

AISI	American Iron and Steel Institute 1000 16th Street, N.W. Washington, DC 20036
AMCA	Air Movement and Control Association 30 West University Drive Arlington Heights, IL 60004
ANSI	American National Standards Institute 1430 Broadway New York, NY 10018
ASME	American Society of Mechanical Engineers 345 East 47th Street New York, NY 10017
ASTM	American Society for Testing Materials 1916 Race Street Philadelphia, PA 19103
AWWA	American Water Works Association 6666 West Quincy Avenue Denver, CO 80235
AWS	American Welding Society 2501 NW 7th Street Miami, FL 33125
CRSI	Concrete Reinforcing Steel Institute 180 North LaSalle Street Suite 2110 Chicago, IL 60601
EJMA	Expansion Joint Manufacturers Association 708 Westchester Avenue White Plains, NY 10604
FM	Factory Mutual System 1151 Boston-Providence Turnpike Norwood, MA 02062
FS	Federal Specification General Services Administration Specifications and Consumer Information Distribution Section (WFSIS) Washington Navy Yard, Bldg. 197 Washington, DC 20407
IEEE	Institute of Electrical and Electronics Engineers 345 East 47th Street New York, NY 10017

IMIAC	International Masonry Industry All-Weather Council International Masonry Institute 823 15th Street, N.W. Washington, DC 20005
MIL	Military Specification Naval Publications and Forms Center 5801 Tabor Avenue Philadelphia, PA 19120
NEMA	National Electrical Manufacturers' Association 2101 L Street, N.W. Washington, DC 20037
NFPA	National Fire Protection Association Battery March Park Quincy, MA 02269
PCA	Portland Cement Association 5420 Old Orchard Road Skokie, IL 20076
PCI	Prestressed Concrete Institute 20 North Wacker Drive Chicago, IL 60606
PennDOT	Pennsylvania Department of Transportation Harrisburg, PA 17120
PS	Product Standard U.S. Department of Commerce Washington, DC 20203
SDI	Steel Door Institute 712 Lakewood Center North Cleveland, OH 44107
SSPC	Steel Structures Painting Council 4400 Fifth Avenue Pittsburgh, PA 15213
UL	Underwriters Laboratories, Inc. 333 Pfingston Road Northbrook, IL 60062

PART 2 PRODUCTS

Not Used.

PART 3 EXECUTION

Not Used:

END OF SECTION 01090

SECTION 01153 - PROCEDURES FOR PROJECT CHANGES

PART 1 GENERAL

1.01 REQUIREMENTS INCLUDED

A. Promptly implement procedures for project changes.

1. Provide full written data required to evaluate changes.

2. Provide full documentation to ENGINEER on request.

B. Designate in writing the member of DEVELOPER's organization:

1. Who is authorized to accept changes in the Work.

2. Who is responsible for informing others in DEVELOPER's employ of the authorization of changes in the Work.

1.02 PROCEDURES

A. OWNER or ENGINEER may require changes by timely submitting a letter of project change to the DEVELOPER. Under no circumstances shall the OWNER or ENGINEER be financially or otherwise liable for any increased costs by virtue of such changes to meet OWNER's requirements.

1. Description of the change, products, and location of the change in the Project.

2. Supplementary or revised Drawings and/or Specifications.

B. DEVELOPER may initiate changes by submitting a written notice to ENGINEER, containing:

1. Description of the proposed changes.

2. Statement of the reason for making the changes.

3. Statement of compliance with Project Manual requirements.

4. Documentation supporting need for change.

5. No changes from the approved design shall be made without written authorization from the ENGINEER.

1.03 CONSTRUCTION CHANGE AUTHORIZATION

A. In lieu of letter of project change, ENGINEER may issue a field Construction Change

Authorization for CONTRACTOR to proceed with a change for subsequent inclusion in letter for project change.

B. Authorization will describe changes in the Work, including both additions and deletions.

C. ENGINEER will sign and date the Construction Change Authorization in the field as authorization for the DEVELOPER to proceed with the changes.

D. CONTRACTOR may sign and date the Construction Change Authorization to indicate agreement.

PART 2 PRODUCTS

Not Used.

PART 3 EXECUTIONS

Not Used.

END OF SECTION 01153

SECTION 01201 - PRECONSTRUCTION CONFERENCES

PART 1 GENERAL

1.01 REQUIREMENTS INCLUDED

A. DEVELOPER participation in preconstruction conferences.

1.02 RELATED REQUIREMENTS

A. Section 01010 - Summary of Work.

1.03 PRECONSTRUCTION CONFERENCE

A. ENGINEER will schedule conference at least 10 days prior to construction.

B. Attendance: OWNER, ENGINEER, FIELD REPRESENTATIVE, DEVELOPER and DEVELOPER’S CONTRACTOR.

C. Agenda:

1. Distribution of Manual.

2. Submittal of list of subcontractors, list of products, list of materials, and progress schedule.

3. Designation of responsible personnel.

4. Procedures and processing of field decisions, submittals, substitutions, changes and project closeout procedures.

5. Scheduling.

6. OWNER's requirements.

7. DEVELOPER’S responsibility for survey and layout.

8. Procedures for testing and acceptance of facilities to be put in service.

9. Procedures for maintaining record documents.

10. DEVELOPER's responsibility for safety.

PART 2 PRODUCTS

Not Used.

PART 3 EXECUTION

Not Used.

END OF SECTION

SECTION 01340 - SHOP DRAWINGS, PRODUCT DATA, AND SAMPLES

PART 1 GENERAL

1.01 REQUIREMENTS INCLUDED

A. Procedures for submittals.

1.02 RELATED REQUIREMENTS

A. Section 01040 - Project Coordination: Coordination of submittals.

B. Section 01405 - Project Quality Control.

C. Section 01720 - Project Record Documents.

1.03 SHOP DRAWINGS

A. Present in a clear and thorough manner. Title each drawing with Project name and number.

B. Identify field dimensions; show relation to adjacent or critical features of Work or products.

C. Minimum Sheet Size: 8 1/2 x 11 inches.

1.04 PRODUCT DATA

A. Submit only pages which are pertinent; mark each copy of standard printed data to identify pertinent products.

B. Modify manufacturer's standard schematic drawings and diagrams to supplement standard information and to provide information specifically applicable to the Work. Delete information not applicable.

C. Provide manufacturer's preparation, assembly, and installation instructions as specified in Section 01405.

1.05 CONTRACTOR REVIEW

A. Review submittals prior to transmittal; determine and verify field measurements, field construction criteria, manufacturer's catalog numbers, and conformance of submittal with requirements of Manual.

B. Coordinate submittals with requirements of Work and Manual.

C. Sign or initial each sheet of shop drawings and product data, and each sample label to certify compliance with requirements of Manual. Notify ENGINEER in writing at time of submittal, of any deviations from requirements of Manual.

D. Do not fabricate products or begin work, which requires submittals until return of submittal with ENGINEER acceptance.

1.06 SUBMITTAL REQUIREMENTS

A. Transmit submittals in accordance with approved procedures.

B. Apply DEVELOPER's CONTRACTOR stamp, signed or initialed, certifying to review, verification of products, field dimensions and field construction criteria, and coordination of information with requirements of Work.

C. Coordinate submittals into logical groupings to facilitate interrelation of the several items.

C. Submit number of opaque reproductions of shop drawings CONTRACTOR requires, plus three, which will be retained by ENGINEER. Maximum number of copies not to exceed seven.

D. Submit number of copies of product data DEVELOPER's CONTRACTOR requires, plus three copies, which will be retained by ENGINEER. Maximum number of copies submitted not to exceed six.

F. Submit number of samples required by individual Specifications sections.

G. Submit under transmittal letter. Identify Project by title and number; identify Contract by number. Identify Work and product by Specifications section and Article number.

1.07 RESUBMITTALS

A. Make resubmittals under procedures specified for initial submittals; identify changes made since previous submittal.

1.08 ENGINEER REVIEW

A. ENGINEER will review and return submittals within 15 working days.

1.09 DISTRIBUTION

A. Distribute reproductions of shop drawings, copies of product data, and samples, which bears ENGINEER’s stamp of approval, to job site file, Record Documents file, subcontractors, suppliers, and other entities requiring information.

PART 2 PRODUCTS

Not Used.

PART 3 EXECUTION

Not Used.

END OF SECTION 01340

SECTION 01405 - PROJECT QUALITY CONTROL

PART 1 GENERAL

1.01 REQUIREMENTS INCLUDED

A. Quality control of products and workmanship.

B. Manufacturer's instructions.

1.02 RELATED REQUIREMENTS

A. Section 01090 - Reference Standards.

B. Section 01340 - Shop Drawings, Product Data, and Samples: Field samples.

1.03 DESCRIPTION

A. Maintain quality control over supervision, subcontractors, suppliers, manufacturers, products, services, workmanship, and site conditions, to produce Work in accordance with Manual.

1.04 WORKMANSHIP

A. Comply with industry standards except when more restrictive tolerances or specified requirements indicate more rigid standards or more precise workmanship.

B. Provide suitably qualified personnel to produce Work of specified quality.

1.05 MANUFACTURER'S INSTRUCTIONS

A. When required in individual Specification sections, submit manufacturer's printed instructions in the quantity required for product data, for delivery, handling, storage, assembly, installation, startup, adjusting, balancing, and finishing, as appropriate.

B. Require compliance with instructions in full detail, including each step in sequence.

C. Should instruction conflict with Manual, request clarification from ENGINEER before proceeding.

1.06 MANUFACTURER'S CERTIFICATES

A. When required in Manual, submit manufacturer's certificate, in duplicate, certifying that products meet or exceed specified requirements, executed by responsible officer.

PART 2 PRODUCTS

Not Used.

PART 3 EXECUTION

Not Used.

END OF SECTION 01405

SECTION 01560 - TEMPORARY CONTROLS

PART 1 GENERAL

1.01 REQUIREMENTS INCLUDED

A. Provide and maintain methods, equipment, and temporary construction, as necessary to provide controls over environmental conditions at the construction site and related areas under DEVELOPER's control. Remove controls and temporary facilities at the completion of work.

1.02 RELATED REQUIREMENTS

A. Section 01040: Project Coordination.

1.03 DUST CONTROL

A. Provide positive methods and apply dust control materials to minimize raising dust from construction operations, and provide positive means to prevent air-borne dust from dispersing into the atmosphere.

1.04 DIVERSION AND CARE OF WATER DURING STREAM CROSSINGS

A. Where required, OWNER will obtain the necessary permits for wetlands and stream crossings from the Pennsylvania Department of Environmental Protection and the Pennsylvania Fish Commission. DEVELOPER shall not perform any work in a stream channel, unless he has been notified that the required permit has been issued, and whether or not the permit is subject to stipulations or special conditions. DEVELOPER shall take sufficient precautions to prevent pollution of wetlands or streams with fuels, oils, bitumens, or other harmful materials. He shall conduct his operations in such a way that will minimize damage to the stream channel and stream banks, prevent erosion of stream banks and deposits of excess sediment in streams, or otherwise harm streams or the properties along streams. DEVELOPER is responsible for compliance with all permit conditions and Environmental Regulations.

B. Diversion and care of water during swamp area or stream crossing and canal embankment excavation work shall consist of diverting and maintaining the flow during the construction period, and dewatering work areas. All permanent construction work shall be performed in areas free from water unless otherwise specifically authorized by ENGINEER. The finished structures and portions thereof shall be protected from damage by flowing water until completion of work.

C. The Contractor shall lay the pipe in the dry by diverting streams and/or dewatering the swamp areas. In diverting streams, extreme care must be used to prevent property damage.

D. Ductile iron pipe with mechanical joints installation for crossing of streams or other wet areas. The bottom of the trench shall be stabile in order to maintain the proper grade of the pipe. If the material in swamp areas or stream bottoms is soft, the unsuitable material shall be removed to a depth at which stabile, undisturbed earth or rock is encountered, not to exceed a depth below pipe invert of three (3) feet, or to the limits designated by the ENGINEER. Trench sub-bedding shall be backfilled with No. 3 coarse aggregate in accordance with the Detail Drawings. If wetlands or stream bottom is rock, normal pipe bedding is required.

E. PVC pipe installation for crossing of streams or other wet areas. The pipe shall be installed on wood blocks in order to maintain the proper grade. The pipe shall be encased in concrete in accordance with the dimensions shown on the Drawings. If the material in swamp areas or stream bottoms is soft, forms shall be used to construct the concrete encasement. Unsuitable material shall be removed to a depth at which stable, undisturbed earth or rock is encountered, not to exceed a depth below pipe invert of three (3) feet, or to the limits designated by the ENGINEER. Trench subbedding shall be backfilled with No. 3 coarse aggregate in accordance with the Detail Drawings. If wetlands or stream bottom is rock, forms shall not be used and, instead, the concrete shall be placed on firm rock below the pipe, and against firm rock on both sides of the pipe.

E. After the concrete is placed, the balance of the trench under streams and their banks shall be backfilled with PA Select Granular Material. The trench over the encasement in wetlands shall also be backfilled with PA Select Granular Material in accordance with Section 02221 and the Detail Drawings, or as directed by the ENGINEER.

F. Removal of Temporary Work: Unless otherwise authorized, all temporary protective structures and other works shall be removed upon completion of work. All banking and filling which is not part of the permanent work shall be removed to the original ground surfaces existing prior to beginning of work and all diversion channels, ditches, and other cavities shall be backfilled with embankment material, placed and compacted in accordance with Section 02221. Materials used in temporary construction shall be disposed of to the satisfaction of the ENGINEER. Whenever the ENGINEER determines that the removal of sheeting and bracing will endanger completed work, he will direct that it be cut off not less than 2 feet below the ground surface, left in place, and backfilled. All temporary protective works shall be removed from the site after having served their purpose.

1.05 WATER CONTROL

A. Provide methods to control surface water to prevent damage to the Project, the site, or adjoining properties.

1. Control fill, grading and ditching to direct surface drainage away from excavations, pits, tunnels and other construction areas, and to direct drainage to proper runoff.

B. Maintain excavations and trenches free of water, provide and operate pumping equipment of a capacity to control water flow.

C. Dispose of drainage water in a manner to prevent flooding, erosion, or other damage to any portion of the site or to adjoining areas, comply with applicable codes and regulations, and Article 1.07.

1.06 DEBRIS CONTROL

A. Maintain all areas under DEVELOPER's control free of extraneous debris.

B. Initiate and maintain a specific program to prevent accumulation of debris.

1. Provide containers for deposit of debris.

2. Prohibit overloading of trucks to prevent spillages.

a. Provide periodic inspection to enforce requirements.

C. Schedule periodic collection and disposal of debris.

1. Provide additional collections and disposal of debris whenever the periodic schedule is inadequate.

1.07 SOIL EROSION AND SEDIMENTATION CONTROLS

A. Plan and execute construction to control surface drainage to prevent erosion and sedimentation.

B. Comply with Erosion and Sediment Pollution Control Program Manual, Dauphin County Conservation District and in accordance with DEVELOPER's approved plan.

PART 2 PRODUCTS

Not Used.

PART 3 EXECUTION

Not Used.

END OF SECTION 01560

SECTION 01610 - TRANSPORTATION AND HANDLING

PART 1 GENERAL

1.01 REQUIREMENTS INCLUDED

A. Provide for expeditious transportation and delivery of products to Project site undamaged, on a schedule to avoid delay of the Work, or work of other contractors.

B. Provide equipment and personnel at the site, unload and handle products in a manner to avoid damage to products.

1.02 RELATED REQUIREMENTS

A. Section 01340: Shop Drawings, Product Data, and Samples.

B. Section 01620: Storage and Protection.

1.03 DELIVERY

A. Arrange deliveries of products in ample time to facilitate inspection prior to installation.

B. Coordinate deliveries to avoid conflict with Work and conditions at site:

1. Limitations of storage space.

2. Availability of equipment and personnel for handling products.

C. Immediately on delivery, inspect shipment to assure:

1. Product complies with requirements of Manual and reviewed submittals.

2. Containers and packages are intact, labels are legible.

3. Products are properly protected and undamaged.

1.04 PRODUCT HANDLING

A. Provide equipment and personnel necessary to handle products, by methods to prevent soiling or damage to products or packaging.

B. Provide additional protection during handling as necessary to prevent scraping, marring or otherwise damaging products or surrounding surfaces.

C. Handle products by methods to prevent bending or overstressing.

D. Lift heavy components only at designated lifting points.

PART 2 PRODUCTS

Not Used.

PART 3 EXECUTION

Not Used.

END OF SECTION 01610

SECTION 01620 - STORAGE AND PROTECTION

PART 1 GENERAL

1.01 REQUIREMENTS INCLUDED

A. Provide secure storage and protection for products to be incorporated into the Work, and maintenance and protection for products after installation and until completion of the Work.

1.02 RELATED REQUIREMENTS

A. Section 01610 - Transportation and Handling.

B. Individual Specifications Sections: Special requirements for specific products.

1.03 STORAGE

A. Store products immediately on delivery, and protect until installed in the Work.

1. Store and maintain products in accordance with manufacturer's instructions.

2. Label products stored with project number, title, and date and other specified or pertinent information.

PART 2 PRODUCTS

Not Used.

PART 3 EXECUTION

Not Used.

END OF SECTION 01620

SECTION 01701 - PROJECT CLOSEOUT PROCEDURES

PART 1 GENERAL

1.01 REQUIREMENTS INCLUDED

A. Administrative provisions for Final Completion and Final Acceptance.

1.02 RELATED REQUIREMENTS

A. Document 00700 - General Conditions.

B. Section 01010 - Summary of Work: Owner occupancy.

C. Section 01720 - Project Record Documents.

1.03 SUBSTANTIAL COMPLETION

A. When DEVELOPER considers Work or designated portion of Work is substantially complete, submit written notice with list of items to be completed or corrected.

B. Should ENGINEEER or PROJECT FIELD REPRESENTATIVE find Work is not substantially complete, he will promptly notify DEVELOPER in writing, listing observed deficiencies.

C. DEVELOPER shall remedy deficiencies and provide a second notice of substantial completion.

1.04 FINAL COMPLETION

A. When DEVELOPER considers Work is complete, submit written certification:

1. Manual has been reviewed.

2. Work has been observed for compliance with Manual.

3. Work has been completed in accordance with Manuals, and deficiencies listed with letter of substantial completion have been corrected.

4. Work is complete and ready for final inspection, and dedication.

B. Should ENGINEER's observations find Work incomplete, he will promptly notify DEVELOPER in writing listing observed deficiencies.

C. DEVELOPER shall remedy deficiencies and send a second certification of final completion.

D. When ENGINEER or FIELD REPRESENTATIVE finds work is complete, OWNER will

request closeout deeds of dedication submittals.

1.05 DEED OF DEDICATION SUBMITTALS

A. Evidence of Compliance with Requirements of Governing Authorities.

B. Project Record Drawings: In accordance with Section 01720.

C. Maintenance Bond in accordance with the Agreement.

D. Deed of dedication.

PART 2 PRODUCTS

Not Used.

PART 3 EXECUTION

Not Used.

END OF SECTION 01701

SECTION 01720 - PROJECT RECORD DOCUMENTS

PART 1 GENERAL

1.01 REQUIREMENTS INCLUDED

A. Maintenance and submittal of Record Documents and samples.

1.02 RELATED REQUIREMENTS

A. Section 01340 - Shop Drawings, Product Data, and Samples.

B. Section 01701 - Project Closeout Procedures.

C. Individual Specifications Sections: Manufacturer's certificates and certificates of inspection.

1.03 MAINTENANCE OF DOCUMENTS AND SAMPLES

A. In addition to requirements in General Conditions, maintain for OWNER one record copy of:

1. Project Drawings.

2. Changes and other modifications to the Project.

3. Reviewed shop drawings, product data, and samples.

4. Manufacturer's certificates.

5. Daily work sheets.

6. Sewer mainline sheets.

B. Maintain Record Documents in a clean, dry and legible condition. Do not use Record Documents for construction purposes.

C. Keep Record Documents and Samples available for review by FIELD REPRESENTATIVE or ENGINEER.

1.04 RECORDING

A. Record construction information on a set of black line or blue line opaque drawings, in a copy of a Project Manual, daily work sheets, or sewer mainline sheets.

B. Record information concurrently with construction progress. Do not conceal any work until required information is recorded.

C. Project Drawings: Legibly mark each item to record actual construction, including:

1. Measured horizontal and vertical locations of underground utilities and appurtenances,

referenced to permanent surface improvements.

2. Field changes of dimension and detail.

3. Changes made by modifications.

4. Details not on original Project Drawings.

5. References to related shop drawings and modifications.

6. Other Documents: Maintain manufacturer's certifications, inspection certifications, field test records, and other documents required by individual Specifications sections.

E. Daily work sheets: Maintain a daily record of work completed and materials used.

F. Sewer Mainline Sheets: Record measured location, length, depth and size of sections of sanitary sewer and laterals.

1.05 SUBMITTALS

A. Project closeout, deliver Record Drawings.

1. Plans & Profiles indicating as-built conditions including other utilities, right-of-way lines, edge of roadway, property lines, etc. labeled “RECORD DRAWINGS”.

2. Provide on the drawings a table indicating lateral and stub stationing, distance from mainline to end of lateral at edge of right-of-way, and depth of lateral at edge of right-of-way.

3. Provide copies in accordance with Agreement.

PART 2 PRODUCTS

Not Used.

PART 3 EXECUTION

Not Used.

END OF SECTION 01720

Record Drawings
Technical Review Checklist

Job Number _____
Developer _____
Development _____
Date _____
Submittal No. _____

Item Number		Item	Acceptable	Unacceptable
1		Drawings Titled "Record Drawings" ("As-Built" is not acceptable)		
2		Base Datum on existing sewers		
3		Name of Engineer		
4		Seal of Engineer		
5		Signature of Engineer		
6		Name of Development and Owner		
7		Index Map (1"=400') indicating:		
	7.1	Sewer Other than 8-inch		
	7.2	Names of Streets		
	7.3	Manhole Numbering		
8		Location of building(s)		
9		Plan view 1"=50 ' Profile 1"=10'		
10		Check Prefix and number system		
11		Right-of-way - 30’		
12		Invert Ins, Invert Outs, Rim Inverts shown on Dwgs		
13		Lateral Stationing from downstream manhole		
14		Size of Laterals Shown		
15		Lateral Length - from main to end of pipe		
16		Lateral Depth - at end of service lateral		
17		Sheet Size 24 by 36		
18		Correct Slopes		
19		Type of Mainline Pipe indicated on profile		

Division 2

Site Work

SECTION 02010 - SUBSURFACE EXPLORATION

PART 1 GENERAL

1.01 DESCRIPTION

A. Digging Test Pits:

1. In locations where new sewers are to be connected to existing sewers, the Contractor will not be permitted to proceed with new construction until he has dug test pits and determined the exact location and elevation of any existing facilities. Dig such test pits only at the locations agreed to by the ENGINEER.

PART 2 PRODUCTS

NOT USED

PART 3 EXECUTION

NOT USED

END OF SECTION 02010

SECTION 02211 - ROCK REMOVAL

PART 1 GENERAL

1.1 WORK INCLUDED

A. Rock Removal- Mechanical Method

B. Rock Removal- Explosive Method

1.2 RELATED WORK

A. Section 02221 - Trenching for Utilities, comply with paragraph 1.04 Protection as applicable.

1.3 QUALITY ASSURANCE

A. DEVELOPER'S CONTRACTOR: DEVELOPER'S CONTRACTOR shall have five years documented experience with the use of explosives for disintegration of subsurface rock.

1. Blaster shall be licensed in accordance with all applicable Federal, State and/or local laws ordinances and regulations.

1.4 REGULATORY REQUIREMENTS

A. Conform to applicable Federal, State and/or local laws, ordinances and regulations for explosive disintegration of rock.

B. Obtain and display permits on site from authorities having jurisdiction before explosives are brought to site or drilling is started.

1.5 REFERENCES

A. NFPA-495-Code for the Manufacturer, Transportation, Storage, and Use of Explosive Materials.

PART 2 PRODUCTS

2.1 MATERIALS

A. Rock Definition: Solid mineral material with a volume in excess of 1/3 cu. yd., that cannot be machine excavated as determined by the ENGINEER.

B. Explosives: Type recommended by explosives firm and required by authorities having jurisdiction.

C. Delay Devices: Type recommended by explosives firm.

D. Blasting Mat Materials: Type recommended by explosives firm.

PART 3 EXECUTION

3.1 INSPECTION

A. Verify site conditions and note irregularities affecting work of this Section.

B. Beginning work of this Section means acceptance of existing condition.

3.2 ROCK REMOVAL - MECHANICAL METHOD

A. Excavate for and remove rock by the mechanical method.

B. Cut away rock at excavation bottom to form level bearing.

C. Remove shaled layers to provide sound and unshattered base for footings, slabs and embankments.

D. In utility trenches, excavate to 8 inches below invert elevation of pipe and 24 inches wider than pipe diameter.

E. Remove excess or unsuitable materials from site.

F. Correct unauthorized rock removal in accordance with backfilling and compaction requirements of Section 02221.

3.3 ROCK REMOVAL - EXPLOSIVES METHODS

A. If rock is uncovered requiring the explosives method for rock disintegration, notify the Engineer and execute as follows:

B. Advise owners of adjacent building or structures in writing and conduct pre-blast survey of wells and structures on adjacent properties, as applicable.

C. Provide seismographic monitoring during progress of blasting operations or limit charges as prescribed in regulations of the Pennsylvania Department of Environmental Protection.

D. Disintegrate rock and remove from excavation.

1. Conduct blasting operations to avoid injury to persons and property.
2. Use explosive quantity and strength required to break rock approximately to intended lines and grades and yet leave rock in unshattered condition.
3. Cover rock with logs or mats, or both where required.
4. Issue sufficient warning to all persons prior to detonating a charge.
5. Store caps and exploders separately from explosives.
6. Remove all explosives from site at completion of blasting operations.

E. Provide the OWNER with copies of daily blasting Records as prescribed in Chapter 211 *"Storage, Handling and Use of Explosives"*, of the Pennsylvania Department of Environmental Protection regulations.

F. Repair any damage to structures, walls, paving, etc. resulting from blasting activities to satisfaction of property owners.

G. The OWNER reserves the right to prohibit blasting and the right to require that rock be removed by drilling and/or drilling and wedging.

3.4 FIELD QUALITY CONTROL

A. Provide for visual inspection of bearing surfaces and cavities formed by removed rock.

END OF SECTION 02211

SECTION 02221 - TRENCHING

PART 1 GENERAL

1.1 WORK INCLUDED

A. Excavated trenches for utilities as shown on Drawings.

B. Compacted bed and compacted fill over utilities to subgrade elevations.

1.2 RELATED WORK

A. Section 02211 - Rock Removal: Removal of rock during excavation.

1.3 REFERENCES

A. Pennsylvania Department of Transportation Publication 408.

1.4 PERMITS

A. TOWNSHIP HIGHWAY OCCUPANCY PERMIT and/or STREET-CUT PERMIT.

B. State highway occupancy permit in AUTHORITY's name.

C. Blasting permits (Township, or other).

D. Stream crossing permit.

E. Wetland encroachment permit.

1.5 PROTECTION

A. Notify all utilities prior to work so that they may locate all affected facilities.

B. Protect excavations by shoring, bracing, sheet piling, underpinning, or other methods required to prevent cave-in or loose soil from falling into excavation.

C. Underpin adjacent structures which may be damaged by excavation work, including service utilities and pipe chases.

D. Notify Engineer of unexpected subsurface conditions and discontinue work in affected area until notification to resume work.

E. Protect bottom of excavations and soil adjacent to and beneath foundation from frost.

F. Use rubber tired or treated equipment on pavement unless otherwise authorized in writing by agency having jurisdiction.

G. Grade excavation top perimeter to prevent surface water run-off into excavation.

H. DEVELOPER'S CONTRACTOR, at all times, shall keep the gutters open so that storm or other waters shall not have their flow obstructed. If, in any case, the material excavated from the trenches must temporarily extend over the gutters, it shall be duty of the DEVELOPER'S CONTRACTOR to plank or bridge over the gutters without extra compensation so that the flow of water is not prevented.

I. Temporary Protective Construction:

1. Temporary Fence Barricade: Erect and maintain substantial temporary fences surrounding excavation to prevent unauthorized persons entering such areas.

2. Temporary Fence: Where necessary, to keep one side of streets or roadway free from obstruction or to keep material piled along side of the trench from falling on private property outside the right-of-way, erect and maintain a safe and substantial fence.

3. Barricades: Furnish and erect substantial barricades at crossings of trenches, or along trenches, to protect the traveling public.

4. Excavation Covers: Cover open excavation when work therein is suspended or left unattended, such as at the end of a workday. For such covers, use materials of sufficient strength and weight to prevent their removal by unauthorized persons.

5. Remove temporary protective construction at the completion of work on the Project.

1.6 WORK IN PRIVATE RIGHT OF WAY

A. Right of way, if required to be secured by owner, protect from injury all property including land, ornamental shrubs and trees, fences, and other improvements there to what may exist and replace in kind all those damaged.

B. Pay all claims for property damage, trespass occupation for damage outside the right-of-way.

C. It shall be the DEVELOPER'S CONTRACTOR'S responsibility to obtain all other rights-of-way for access to the Construction site. Written authorization from all effected Property Owners shall be provided to ENGINEER before beginning work in the affected area.

PART 2 PRODUCTS

2.1 SELECT MATERIALS IN ACCORDANCE PENNDOT'S PUBLICATION 408

A. Coarse Aggregate AASHTO No. 8 (PennDot 1B Stone).

B. Coarse Aggregate AASHTO No. 57 (PennDot 2B Stone).

C. Coarse Aggregate PA No. 2A.

D. Coarse Aggregate PA No. R-3.

E. Bituminous Concrete Base Course.

F. SRL – E Wearing Course.

G. Class E – 1 Emulsified Asphalt Tack Coat.

H. AC – 20 Asphalt Cement.

PART 3 EXECUTION

3.1 INSPECTION

A. Verify stockpiled fill to be reused is approved.

B. Verify areas to be backfilled are free of debris, snow, ice, or water, and surfaces are not frozen.

3.2 PREPARATION

A. Identify required lines, levels, contours, and datum.

B. When necessary, compact subgrade surfaces to density requirements for backfill material.

3.3 EXCAVATION

A. All excavation shall be unclassified; remove as required for piping installation shown on the Drawings. Excavate subsoil required for piping as shown on the Drawings.

B. Removal of Pavement & Storage of Materials.

1. Grub and clean surface of all materials of whatever nature over the line of trench.
2. Classify material removed and preserve such material as may be required for use in backfilling.
3. Store material removed and preserve such material as may be required for use in backfilling.
4. Cut paving to neat lines equidistant from the centerline of the trench. Width of paving removed initially shall be no greater than the trench width.
5. In business streets, important thoroughfares, narrow streets, or other limited areas, proceed as follows:

   a. Remove from streets, the first 100 feet or additional length as may be necessary when directed by the ENGINEER at no additional cost to the OWNER.
   b. Material subsequently excavated shall be used to backfill the trench where required by the Detail Drawings.

c. Material not required for backfilling or which cannot be stored on streets or right-of-ways shall be removed at no cost to the OWNER. Contractor shall at his own expense bring back as much of the required material removed as maybe required to properly backfill the trench or if so required furnish other material as may be necessary at no cost to the OWNER.

D. Hand trim excavation and leave free of loose matter. Hand trim for bell and spigot pipe joints.

E. Remove lumped subsoil, boulders, and rock up to 1/3 cu yd, measured by volume. Remove larger material under Section 02211.

F. Excavation shall not interfere with normal 45 degree bearing splay of foundations.

G. Correct unauthorized excavation at no cost to OWNER.

H. Fill over-excavated areas under pipe bearing surfaces in accordance with direction by ENGINEER.

I. Stockpile excavated material in area designated on site and remove excess subsoil not being reused from site.

J. Excavate trenches at least 30 feet in advance of pipe laying except in muck or quicksand where pipe laying must follow as closely as the best interests of the Work will require.

K. Excavated material shall be placed so as to minimize the inconvenience to occupants traveling in streets and driveways of adjoining properties.

L. Excavated material shall not be deposited on private property without written consent of the Property Owner thereof has been filed with the Owner.

M. In case more material is excavated from an excavation or trench than can be backfilled over the completed work, or can be stored within the limits of the right-of-way, or in the event working space is limited or space cannot be provided for traffic and drainage, the excess material shall be removed to some convenient place provided by the DEVELOPER'S CONTRACTOR. The DEVELOPER'S CONTRACTOR shall at his own cost, bring back as much material so removed as may be required to backfill the work; if of the proper kind; or, if so required furnish other material as may be necessary.

3.4 BACKFILLING

A. Support pipe during placement and compaction of bedding fill. The bedding shall be graded by hand to provide a uniform and continuous bearing support for its entire length - bell holes shall be provided at ends of pipe lengths, but size of holes shall be kept to a minimum. The bell holes shall be backfilled with bedding material, which shall be compacted and brought up to the height of the adjacent material. After pipe is placed bedding material shall be hand placed and carefully compacted to the dimension shown on the Drawings.

B. Backfill trenches to contours and elevations. Backfill systematically, as early as possible, to allow maximum time for natural settlement. Do not backfill over porous, wet, or spongy subgrade surfaces.

C. Compact all backfill material as shown on detailed Drawings or as directed by ENGINEER.

D. Maintain optimum moisture content of backfill materials to attain required compaction density.

E. Remove surplus backfill material from site.

F. Backfill in accordance with the details shown on the Drawings.

G. Materials shall be placed to 95% of the maximum dry density as determined by ASTM D698 or as directed by the ENGINEER.

H. At the end of each workday the excavated area shall be completely backfilled and/or steel plates shall be placed over the excavation to accommodate traffic.

I. Backfill shall be free of topsoil, vegetation, lumber, metal, refuse; and free of rock or similar hard objects larger than six inches in any direction.

3.5 UNSUITABLE MATERIAL

A. Remove and dispose of unsuitable material encountered during trench excavation work. Replace with R-3 Coarse Aggregate material as specified herein.

3.6 TOLERANCES

A. Top Surfaces of Backfilling: Plus or minus one-eighth (1/8) inch.

3.7 SEEDING

A. General Requirements: The Seeding work shall consist of surface restoration work in lawn areas and also in right-of-ways. Minimum materials requirements are as follows:

1. Topsoil: Use productive topsoil as available on site as excavated. Add topsoil as required using topsoil from DEVELOPER'S CONTRACTOR source. Provide topsoil that is free of subsoil, clay, stones and materials toxic or otherwise harmful to lawn and grass growth.
2. Lime and Fertilizers: Provide lime and Fertilizer which conforms to the applicable State regulations and which is specifically formulated for lawn and grass growth.
3. Lawn Mulch and Mulch Binder: Provide mulch material free of noxious weeds, seed bearing stalks, and roots harmful to lawn growth. Provide non-asphalt emulsion binders of water soluble sticking aids, gums and polymers.

B. Grass Seed: New crop seed, furnished in sealed packages with proof of correct mixture evidenced, age of seed indicated and compliance with applicable state regulations evidenced if required.

1. Mixture Type A (Lawns):

Species in Mix	Mix Percent By Weight	Min Percent Purity	Min Percent Germination	Max Percent Weed Seed
Kentucky 31, Tall Fescue	20	90	90	0.50
Kentucky Bluegrass	60	85	80	0.40
Perennial	20	90	90	0.50

2. Mixture Type B (Right-of-Way):

Species in Mix	Mix Percent By Weight	Min Percent Purity	Max Percent Germination	Weed Seed
Kentucky Bluegrass	30	85	80	0.40
Perennial Rye Grass	70	90	90	0.15

C. Performance: Place topsoil over the restored areas to an approximate depth of four inches. Grade the surface to meet adjoining grades and to be free of objectionable material larger than two inches.

1. Incorporate lime and fertilizer into the topsoil layer in a tillage operation. Apply lime and fertilizer at the rates recommended on the packages of the individual products.
2. Sow the seed mixtures at the minimum rate of FIVE pounds per 1,000 sq. ft. area and not more than five days after soil supplements have been applied.
   a. Cover seeds by imbedding them into the topsoil ¼ inch using equipment designed for the specific purpose.
   b. Compact the seeded areas using a lawn roller weighing 60 to 90 pounds per linear foot of roller.
   c. Immediately following seeding, apply mulch to a total coverage depth of not less than 1 ½ inches. Apply mulch binder in the number of passes as needed to secure the mulch but not to exceed three passes with the maximum applied binder not exceeding 10.0 gallons per 1,000 sq. ft.

END OF SECTION 02221

SECTION 02270 – EROSION AND SEDIMENT POLLUTION CONTROL

PART 1 GENERAL

1.01 DEVELOPER SEWER EXTENSIONS

A. The Developer and Developer's Engineer and Contractor assume all responsibility for design and implementation of the Erosion and Sedimentation Control Plan.

1.02 REQUIREMENTS OF REGULATORY AGENCIES

B. Erosion and Sediment and Pollution Control Plan:

1. Conduct soil erosion and sediment pollution control work in accordance with rules, regulations and requirements adopted by the Pennsylvania Department of Environmental Protection (DEP).

2. Detail requirements for the control plan are described in an Erosion and Sediment Pollution Control Program Manual that may be obtained from the Bureau of Soil and Water Conservation, Division of Soil Resources and Erosion Control, Harrisburg, Pennsylvania.

C. Fines and related costs resulting from failure to provide adequate protection against soil erosion and sediment pollution control are the obligation of the Contractor.

D. Erosion and sediment pollution control measures employed will be subject to approval and inspection by the Pennsylvania Department of Environmental Protection and/or County Conservation District.

PART 2 PRODUCTS

NOT USED

PART 3 EXECUTION

NOT USED

END OF SECTION 02270

SECTION 02300 – TUNNELING, BORING AND JACKING

PART 1 – GENERAL

1.01 RELATED WORK

A. Rock Removal: Section 02211

B. Trenching: Section 02221

C. Piped Utilities-Sanitary Sewers: Section 02700

D. Service Lateral and Building Sewer Installation: Section 02720

1.02 QUALITY ASSURANCE

A. Workmen Qualifications:

1. Employ in the work only personnel thoroughly trained and experienced in the skills required.

1. Have welds made only by welders, tackers and welding operators who have been previously qualified by tests as prescribed in the Structural Welding Code AWS D1.1 of the American Welding Society to perform the type of work required.

B. Design Criteria:

1. Provide encasing conduit under highways of sufficient strength to support all superimposed loads, including an American Association of State Highway and Transportation Officials H-20 Loading with 50 percent added for impact.

C. Requirements of Regulatory Agencies:

1. Work of this Section within State Highway right-of-way will be subject to inspection by representatives of the Commonwealth of Pennsylvania Department of Transportation, and the work must be performed in accordance with the requirements of the latest edition of the Commonwealth of Pennsylvania, Pennsylvania Code, Title 67, Transportation, Department of Transportation, Chapter 459, Occupancy of Highways by Utilities.

2. Inspection, insurance or other charges demanded by the Commonwealth of Pennsylvania Department of Transportation, PennDOT, other authority having jurisdiction shall be paid for by the DEVELOPER.

D. Source Quality Control:

1. Shop Tests: In accordance with Article 1.06 of the General Instructions, factory test pipe materials listed in the following. Each pipe manufacturer must have facilities to perform listed test. The Engineer reserves the right to require the

manufacturer to perform such additional number of tests as the ENGINEER may deem necessary to establish the quality of the material offered for use.

MATERIAL	TEST METHOD	NUMBER OF TESTS
a. Steel Pipe	ASTM A 139 or ASTM A 53	As specified in ASTM A 139 or ASTM A 53 as applicable

2. Laboratory Tests: The ENGINEER reserves the right to require that laboratory tests also be conducted on materials that are shop tested. Furnish labor, materials, and equipment necessary for collecting, packaging, and identifying representative samples of materials to be tested and the shipping of such samples to the Testing Laboratory.

1.03 REFERENCES

A. American Association of State Highway and Transportation Officials (H-20): (AASHTO) Loading for Conduits Installed Under Streets, Road, or Highways.

B. American Society for Testing and Materials:

1. ASTM A 53, Specification for Pipe, Steel, Black and Hot-Dipped, Zinc-Coated Welded and Seamless.

2. ASTM A 123, Specification for Zinc (Hot-Dip Galvanized) Coatings on Iron and Steel Products.

3. ASTM A 139, Specification for Electric-Fusion (Arc)-Welded Steel Pipe (NPS 4 in. and Over).

4. ASTM A 307, Specification for Carbon Steel Externally Threaded Standard Fasteners.

5. ASTM A 569, Specification for Steel, Carbon (0.15 Maximum Percent, Hot-Rolled Sheet and Strip, Commercial Quality.

6. ASTM A 615, Specification for Deformed and Plain Billet-Steel Bars for Concrete Reinforcement.

7. ASTM C 32, Specification for Sewer and Manhole Brick (Made from Clay or Shale.)

8. ASTM C 33, Specification for Concrete Aggregates.

9. ASTM C 150, Specification for Portland Cement.

10. ASTM C 270, Specification for Mortar for Unit Masonry.

C. American Welding Society: AWS D1.1 Structural Welding Code.

D. Commonwealth of Pennsylvania Department of Transportation (PDT), Specifications Publication 408/87, as supplemented.

1. PDT Section 703.2 Coarse Aggregate.

1.04 SUBMITTALS

A. Shop Drawings and Products Data: Furnish completely dimensioned shop drawings, cuts or other data as required to provide a complete description of Products to be installed.

B. Certificates: Certified records or reports of results of shop tests, such records or reports to contain a sworn statement that shop tests have been made as specified.

C. Furnish PennDOT for approval, detail drawings, accompanied by design calculations, for the tunneling shield, tunneling pits, including sheeting and bracing therefore, tunnel liner plate and tunneling procedure and grouting method and all such drawings and computations shall bear the seal of a Registered Professional Engineer.

D. Furnish PennDOT for approval, detail drawings, accompanied by design calculations, for boring or jacking pits including sheeting and bracing therefore, steel pipe and boring or jacking procedure and grouting method and all such drawings and computations shall bear the seal of a Registered Professional Engineer.

1.05 PRODUCT DELIVERY, STORAGE AND HANDLING

A. Transport, handle and store materials and Products specified herein in a manner recommended by the respective manufacturers of such to prevent damage and defects.

1.06 SITE CONDITIONS

A. Scheduling:

1. Perform tunneling, boring or jacking operations continuously on a 24-hour basis if required by PennDOT or railroad company.

B. Protection: As specified in Section 02221 and such added requirements included herein.

1. Adequately support and protect utilities and facilities that are encountered in, or may be affected by, the work.

2. Accommodation of Traffic: As specified in Section 01570.

3. Explosives and Blasting: Not permitted in performance of work of this Section.

4. Excavation Conditions: As specified in Section 02221.

5. Excess Materials: As specified in Section 02221.

6. Borrow Material: As specified in Section 02221.

PART 2 PRODUCTS

2.01 ENCASING CONDUIT

A. Steel Tunnel Liner Plate: Cold formed, steel, four flanged liner plates.

1. Minimum Inside Neutral Axis Diameter: As shown on the Drawings or as indicated by the Engineer.

2. Minimum Thickness: U.S. Standard Gauge 8, marked on each liner plate by manufacturer.

3. Steel: Structural quality hot rolled carbon steel; ASTM A 569.

4. Provide tapped grout holes and plugs (minimum 1 ½ inch diameter) in every third plate.

5. Hot Dipped Galvanized: ASTM A 123.

6. Nuts and Bolts: Minimum ½ inch diameter, coarse thread, conforming to ASTM A 307, Grade A.

7. Coating: Factory coat inside and outside with asphaltic material to a minimum thickness of 0.05 inch.

8. Acceptable Manufacturers:

a. Armco Drainage and Metal Products, Inc.
b. Republic Steel Corp.
c. Commercial Shearing and Stamping Company.
d. Or Equal.

B. Steel Pipe: ASTM A 139, Grade B or ASTM A 53, Grade B.

1. Minimum Diameter: As shown on the Drawings.
2. Minimum Wall Thickness: As required by design criteria.

2.02 SEWER PIPE AND FITTINGS

A. Ductile Iron Pipe (DIP): As specified in Section 02700.

2.03 MISCELLANEOUS MATERIAL

A. Casing Spacers

1. Spacers shall be made of Stainless Steel and UHMW polymer plastic runners.

2. Shall be supplied by Advance Products & Systems, Inc., PO Box 53096, Lafayette, LA 70505-3096. 1-318-233-6116.

B. End Seals

1. 1/8” thick synthetic rubber with S.S. Brands.

2. Model AC Pull on End Seal by Advance Products & Systems, Inc.

C. Aggregate Backfill:

1. AASHTO No. 8 (PennDot 1B stone) Coarse Aggregate conforming to PDT Section 703.2.

D. Sand: ASTM C 33, fine aggregate.

E. Hold Down Rod: Reinforcement bar, ASTM A 615, Grade 60, deformed.

1. Field coat with Bitumastic No. 300-M as manufactured by Koppers Company, Inc., or equal.

2.04 DEVELOPER’S CONTRACTOR OPTIONS IN PRODUCTS

A. The DEVELOPER’S CONTRACTOR may install a larger diameter-encasing conduit than is shown on the Drawings, provided that the DEVELOPER’S CONTRACTOR has secured the prior written approval of the applicable agencies having jurisdiction. If the DEVELOPER’S CONTRACTOR elects to install a larger diameter-encasing conduit than is shown on the Drawing, all necessary clearances under the roadways, pipelines or other structures shall be maintained.

PART 3 – EXECUTION

3.01 INSPECTION

A. Inspect Materials and Products before installing in conformance with the inspection requirements of the appropriate referenced standard.

B. Remove rejected Materials and Products from the Project.

3.02 PREPARATION

A. As specified in Sections 02221 and 02211.

3.03 PERFORMANCE

A. Excavation: As specified in Section 02221 and 02211 and such added requirements included herein:

1. Should the DEVELOPER’S CONTRACTOR in constructing any tunneling, boring or jacking pit excavate below the sub grade for the pipe sewer, he will be required to backfill the area excavated below the sub grade with Aggregate Backfill or with concrete as required by the ENGINEER.

B. Tunneling:

1. Tunneling shall conform to the applicable requirements of Section 02221 and all applicable requirements of PennDOT.

   a. Install the tunnel liner plate to the limits indicated on the Drawings or required by the ENGINEER or PennDOT.
   b. Tunneling pits shall be as shown on the Sewer Detail Drawing entitled "Tunnel Work Pit and Tunnel Liner Plate".
   c. Exercise care in trimming the surface of the excavated section in order that the steel liner plates fit snugly against undisturbed material.
   d. Do not advance excavation ahead of the previous installed liner plates any more than is necessary for the installation of the succeeding liner plate.
   e. Support vertical face of the excavation as necessary to prevent sloughing. Completely bulkhead the heading at any interruption of the tunneling operation.
   f. Paint field bold heads and nuts.

2. Grouting:

   a. Place a uniform mixture of grout under pressure behind the liner plate and the undisturbed material.
   b. Provide grout holes tapped for no smaller than 1 ½ inch pipe, spaced at approximately 3 feet around the circumference of the tunnel liner plates in every third ring.
   c. Start grouting at the lowest hole in each grout panel and proceed upwards simultaneously on both sides of the tunnel.
   d. Install threaded plug in each grout hole as the grouting is completed at that hole.
   e. Proceed with grouting as required by the Engineer, but in no event shall more than six linear feet of tunnel be progressed beyond the grouting.

C. Boring:

1. Boring shall conform to the applicable requirements of the regulatory agency and additional requirements specified herein.

   a. Install the encasing conduit by the boring method to the limits indicated on the Drawings or such additional limits required by the ENGINEER or regulatory agency.
   b. Excavate and sheet boring pit.
   c. Provide devices at the front of the pipe to prevent auger and cutting heads from leading the encasing conduit. Unsupported excavation ahead of pipe is prohibited.
   d. Over-cut by cutting head not to exceed the outside diameter of the encasing conduit by more than one-half inch.
   e. The use of water or other liquids to facilitate casing placement and spoil removal is prohibited.

f. If voids develop or if bored hole diameter is more than 1 inch greater than the outside diameter of the encasing conduit, place Grout to fill voids.
g. Check conduit alignment in a manner and at times required by ENGINEER. Check alignment and grade at least once per shift as the work progresses.
h. Completely bulkhead heading at interruptions in boring operation.
i. Completely weld joints around the circumference between sections of steel pipe encasing.

D. Jacking:

1. Jacking shall conform to all applicable requirements of the regulatory agencies and additional requirements specified herein. This operation shall be conducted without hand mining ahead of the pipe and without the use of any type of boring, auguring, or drilling equipment.

a. Install the encasing conduit by the jacking method to the limits indicated on the Drawings or such additional limits required by the Engineer or the regulatory agencies.
b. Preliminary work shall consist of excavating and sheeting an acceptable shaft on the downstream side of the crossing and the installation of a backstop and guide timbers.
c. Design: Bracing and backstops shall be so designed and jacks of sufficient rating used so that the jacking can be progressed without stoppage except for adding lengths of pipe.
d. Accurately place guide timbers on line and grade.
e. Support: The vertical face of the excavation shall be supported as necessary to prevent sloughing.
f. Use poling boards and bulkheads as required if subgrade conditions in the heading are unstable.
g. Jacking and excavation within the pipe shall proceed simultaneously with the ground being cut no more than 2 inches outside the pipe at the tope and sides and not less than 2 inches above subgrade at the bottom.
h. The use of water or other liquids to facilitate casing placement and spoil removal is prohibited.
i. If voids develop or if jacked hole diameter is more than 1 inch greater than the outside diameter of the encasing conduit place grout to fill voids in manner approved by the regulatory agencies.
j. Check conduit alignment in a manner and at times required by ENGINEER. Check alignment and grade at least once per shift as the work progresses.
k. Completely bulkhead heading at interruptions in jacking operation.
l. Completely weld joints around the circumference between sections of steel pipe encasing.

E. Laying and Testing Pipe: Lay and test pipe in encasing conduit as specified in Section 02700 and such added requirements included herein.

1. Support and maintain the alignment and grade of sewer piping until the concrete cradle is installed and concrete has cured.

2. Provide concrete cradle as indicated on Detail Drawings.

3. Paint exposed portion of hold down rod if used.

F. Encasing Conduit Filling and Closing: After the pipe sewer has been installed in the encasing conduit and has been tested, fill the encasing conduit with sand or AASHTO No. 8 stone. Concrete is not considered acceptable fill material.

1. Close one end of encasing conduit with rubber boot before filling encasing conduit. Close other end of encasing conduit with rubber boot after filling encasing conduit or as operation dictates.

G. Cleanup: As specified in Section 02221.

3.04 FIELD QUALITY CONTROL

A. Testing: After laying pipe in encasing conduit and before filling conduit conduct line acceptance testing as specified in Section 02700.

END OF SECTION 02300

SECTION 02605 - MANHOLES

PART 1 GENERAL

1.1 RELATED DOCUMENTS

A. Drawings and general provision of Contract, including General and Supplementary Conditions and other Division 1 Specification Sections, apply to this Section.

B. Section 02700 - Piped Utilities – Sanitary Sewers.

1.2 WORK INCLUDED

A. Installation of Manholes, etc.

1.3 QUALITY ASSURANCE

A. Manhole Acceptance Tests:

1. General:

a. After the manhole has been completely constructed, the frame bolted thereon, and the trench backfilled, a vacuum test shall be performed. A manhole acceptance test shall be conducted after backfilling and bituminous concrete base course or binder course has been completed unless otherwise directed by the Inspector. This test will be done from the rim of the manhole frame.

b. Any damage caused to properties due to sewage handling and/or sewage backup while vacuum testing shall be the responsibility of the DEVELOPER/CONTRACTOR.

2. Vacuum Testing Equipment:

a. Furnish testing equipment as specified in the manufacturer's written instructions. Pressure gauge, for this procedure, MUST read in inches of mercury, not in PSI.

3. Vacuum Test Procedures:

a. Perform vacuum testing in accordance with the testing equipment manufacturer's written instructions.

b. Draw a vacuum of ten inches of mercury and close the valves.

c. Manhole will be acceptable when vacuum does not drop below nine inches of mercury for the following manhole sizes and times:

1) Four foot diameter - 60 seconds.

2) Five foot diameter - 75 seconds.

3) Six foot diameter - 90 seconds.

d. Repair or replace defective manholes and retest.

1.4 SUBMITTALS

A. Submit shop drawings or catalogue cuts, as appropriate, for materials listed under Article 2.1 of this Section. Submit only those materials that are actually to be used in the work. These will usually be as follows:

1. Precast Concrete Manholes.
2. Manhole Grade Rings.
3. Manhole Steps.
4. Manhole Castings.
5. Gaskets, Adapters, and Other Appurtenances.

B. Submit manufacturer's Certification of Compliance in accordance with Section 01300.

C. Make submittals prior to start of construction. Make submittals to ENGINEER.

1.5 DELIVERY, STORAGE, AND HANDLING

A. Deliver, store and handle manholes, manhole frames and covers and appurtenances in accordance with the manufacturer's recommendations, and in such manner as to protect the materials from damage.

B. Manholes and related materials shall be loaded and unloaded by lifting with hoists so as to avoid damage. Under no circumstances shall such material be dropped or skidded against material already on the ground.

C. Manholes and related materials shall at all times be handled with care to avoid damage. The interior shall be kept free from dirt and foreign matter. All manholes, manhole frames and covers and appurtenances shall be carefully lowered or raised into place with suitable equipment in a manner that will prevent damage to the material. Under no circumstances shall manholes or accessories be dropped or dumped.

D. Manholes, and all related materials, shall be thoroughly inspected for defects prior to their being installed. Any defective, damaged, or unsound material, shall be repaired or replaced as directed.

PART 2 PRODUCTS

2.1 MATERIALS

A. Manholes.

1. Precast Concrete Manhole Base, Top and Riser Sections.

a. Precast Concrete manholes shall be of the design and dimensions shown on the sewer Detail Drawings. Precast concrete bases shall be manufactured in accordance with the requirements of ASTM C478 except as follows:

2. Concrete: Composition and compressive strength conforming to ASTM C478 except use Type II or Type III cement in manhole components and increase compressive strength to 4500 psi (at 28 days) in precast bases.

   a. Openings in precast concrete manholes to accommodate the connection of piping shall be custom preformed for each manhole at the time of manufacture. Openings for connection of the piping shall be of the size and shape required for the particular type of pipe seal provided.

   b. All precast concrete manholes shall be designed to accommodate AASHTO highway load class HS-20 .

   c. The tops of the precast concrete bases shall be accurately formed to receive the tongue of the bottom precast concrete manhole section of the wall.

   d. Precast top sections shall have hold down bolt inserts factory cast in the top section. Each top shall have four (4) three quarter (3/4) inch threaded inserts or slotted inserts to accommodate manhole frame hold down bolts. Insert types designed for an ultimate load in tension of 12,500 pounds. Coordinate insert locations in the top section to match the bolt hole locations on the manhole frame. All inserts shall be factory plugged before shipping.

3. Monolithic Poured-In-Place Concrete Manhole Bases. (Approval must be obtained from the Authority to use this type of base.)

   a. Monolithic poured-in-place concrete bases are permitted for use on a case-by-case basis, with prior written approval of the Authority.

   b. Portland cement: ASTM C150 Type II, Moderate Sulfate Resistance.

   c. Concrete used for poured-in-place manhole bases shall be of a 4,000 psi mix design.

   d. Consistency: The concrete shall be of uniform consistency. The maximum allowable slump shall be 2-inches.

      1) This strength requirement shall be verified by tests. At least one test shall be made per day or one test per structure. A test shall consist of at least two cylinders whose 28-day compressive strengths shall be determined by an approved laboratory.

4. Concrete used for channels inside precast manhole bases shall be of a 3500 psi Mix Design with a 5/8" diameter maximum allowable aggregate size.

   a. Consistency: The mixed concrete shall be of uniform consistency. The maximum allowable slump shall be 1-inch.

   b. Cement shall be Type II or Type III.

5. Precast Reinforced Concrete Manhole Riser and Top Sections:

   a. As previously specified.

6. Steel Reinforcement:

a. Steel reinforcement used in the manufacture of precast concrete manhole bases and precast concrete riser and top sections shall conform to the requirements specified in Section 6 of ASTM C478.

7. Gasket for Sealing Precast Concrete Manhole Joints:

a. Manhole section joint gasket materials specified herein shall be used in accordance with the Detail Drawings. Only one method of joint sealing and gasketing will be permitted for all manholes.

1) Preformed Plastic Gaskets for Manhole Joints:

a) Flexible plastic gasket-type sealant for manhole joints shall be butyl rubber (plastic) sealant shall meet the requirements of Federal Specification SS-S-210A (3.4 Adhesion & Hydrostatic Pressure) and shall conform with the applicable requirements specified in Section 5.7 of ASTM C361.

b) The sealing compound shall not leak at the joints (while being tested at 10 psi) for a period of 24 hours. Requirements for sag and flow resistance (vertical and overhead 1"-wide joints) shall be such that no sagging is detected (while being tested at 135 degrees F) for a period of 5 days. Requirements for chemical resistance shall be such that no visible deterioration of the sealing compound occurs (when immersed separately in a solution of acid, alkalies and saturated hydrogen sulfide) for a period of 30 days.

c) The sealing compound shall be supplied in extruded rope form of suitable cross-section. The size of the sealing compound shall be in accordance with the manufacturer's recommendations and sufficient to obtain squeeze-out of the material around the entire interior and exterior circumference when the joint is completed. The sealing compound shall be protected by a suitable removable two-piece wrapper. The two-piece wrapper shall be so designed that one-half may be removed longitudinally without disturbing the other half to facilitate application of the sealing compound. The sealing compound contained within the joint shall be the sole element utilized in sealing the joint from internal and external hydrostatic pressure. Joint surfaces shall be primed, sealing compound applied, and joint made in strict conformance with the written specifications of the sealing compound manufacturer.

2) Rubber O-Ring Gaskets for Manhole Joints:

a) For joints sealed with rubber gaskets, the joint design and rubber gaskets shall conform with the applicable requirements specified in ASTM C443 and in Section 5.7 and Section 4.10 respectively of ASTM C361. A

rectangular groove shall be provided in the tongue end of each manhole section to receive the rubber gasket and to contain the deformed gasket on all four sides when the joint is completed.

8. Pipe Openings and Seals:

   a. Openings shall be preformed during manufacturing in each base and riser section requiring a pipe opening. Each opening shall accommodate the type of pipe and pipe seal required.

   b. Pipe opening seals shall meet the requirements specified in ASTM C923.

   c. Pipe opening seals integrally cast with holes for pipe in precast concrete manhole walls shall be all-rubber composition, flexible, pliable, and provide up to 15 degrees lateral, diagonal or vertical pipe deflection. Gaskets shall be leak-proof tested to 20 psi., and shall meet or exceed rubber quality standards of ASTM C-443.

   d. Pipe opening seals not cast with holes for pipe shall be pliable and permit deflection. A strong rubber coated steel center compression ring and a long rubber sleeve with a deep groove secured stainless steel clamp shall be used to create a positive seal.

   e. Rubber adapter ring for use on PVC pipe in poured-in-place manhole bases shall be recommended by the manufacturer.

   f. Manhole adapters shall be provided for all PVC pipe in cut-in pipe opening and shall be as recommended by the pipe manufacturer.

9. Frame Hold Down Bolts

   a. Bolts, nuts and washers shall be stainless steel in accordance with ASTM A307 and ASTM A276.

10. Manhole Steps:

   a. Aluminum Step: Aluminum alloy 6061-T6, tensile 38,000 psi., yield 35,000 psi. Manhole steps shall be installed in the reinforced concrete walls of the riser and eccentric top sections. Coat the portion of aluminum step being embedded in concrete with bituminous paint.

   b. Reinforced Plastic Step: Composed of a 3/8-inch Grade 60 ASTM A615 deformed steel reinforcing bar completely encapsulated in Grade 49108, ASTM D4104 polypropylene copolymer compound Type II.

      1) MA Industries, Inc.: Type PS-2-B or Type PS 4.

      2) Or equal

   c. Field installation of manhole steps shall not be permitted.

   d. Steps shall be aligned vertically and spaced so as to be on equal centers in the assembled manhole, a maximum distance apart 16 inches. Steps shall be located the minimum distance from the ends of riser and top sections as shown on the Detail Drawing. Each step shall be embedded in the riser

section at least three and one-half (3 1/2) inches but not more than four (4) inches.

11. Manhole Castings:

a. Castings for manhole frames and covers shall be heavy duty cast iron.

b. Ferrous Castings shall be of uniform quality, free of blow holes, shrinkage distortion, or other defects.

c. Metal shall conform to ASTM A-48 Class 30 for gray iron. Designed for AASHTO highway loading class HS-20.

d. All castings shall be manufactured true to pattern; component parts shall fit together in a satisfactory manner. Frames and covers shall have continuously machined bearing surfaces to prevent rocking.

e. As-cast dimensions may vary one half the maximum shrinkage characteristic of the metal or ± 1/16 inch.

f. Manhole Casting Schedule.

1) Standard frame and cover.

a) Total weight, 255 pounds minimum.

b) Provide two stainless steel recessed lifting eyes. Lifting eyes extending through the cover will not be permitted.

c) The word *"SANITARY SEWER"* shall be cast appropriately in the center of the cover. Lettering shall be a minimum of 2-inches high.

d) Two concealed pick holes shall be provided.

e) Provide machined dovetail groove centered in lip seat of cover for ¼-inch diameter continous loop polyisoprene or neoprene rubber gasket (40 durometer).

f) Drill four 7/8-inch diameter holes in frame flange equally spaced.

2) Watertight frame and cover.

a) Total weight 600 pounds minimum.

b) The word “SEWER” shall be cast appropriately in the center of the cover; lettering shall be a minimum of 2-inch high.

c) Two concealed pick holes shall be provided.

d) The inner lid shall be provided with a machined dovetail groove for a self-sealing1/4-inch diameter continuous loop polyisoprene gasket (40 durometer).

e) Drill four 7/8-inch diameter holes in frame flange.

g. Manhole frames and covers shall be as shown on the Detail Drawings.

h. Manufacturer.

1) East Jordan Iron Works, Inc., Middletown, DE (no substitutes allowed)

12. Grade Rings:

a. General

1) Grade adjustment for a manhole shall not exceed six (6) inches.

b. Precast Concrete Grade Rings

1) Precast concrete grade rings for leveling units shall be manufactured in compliance with the requirements of the Specifications for Precast Reinforced Concrete Manhole Sections, ASTM Designation C478; and shall be as thick as necessary to provide the required grade adjustment, but not less than 1 ½ inches in thickness. Split grade rings are unacceptable. Broken or cracked concrete grade rings will not be acceptable.

c. Rubber Grade Rings

1) Rubber grade rings (rubber adjustment riser) for leveling units shall comply with the following:

PHYSICAL PROPERTIES	**TEST RESULTS**	**TEST METHOD**
Density	±1.098 g/cm^3	ASTM C 642 - 90
Durometer Hardness - Molded surface - Interior surface	 75A±10 points 73A±10 points	Based on ASTM D 2240
Tensile Strength	1.6 MPa (232 psi) (not less than 1 MPa)	ASTM D 412 - 87
Compression Deformation - Initial deformation - Final deformation	under 1 MPa (145 psi) 6±4% 6±4%	Based on ASTM D 575
Compression Set	0.4% (no more than 4%) under 1 MPa (145 psi)	Based on ASTM D 395
Freeze and Thaw When Exposed to Deicing Chemicals	no loss after 50 cycles	ASTM C 672 - 91
Coefficient of Thermal Expansion	1.08 x 10^{-4} mm/mm/°C (6 x 10^{-5} in/in/°F)	ASTM C 531 - 85

Weathering (70 hours at 70° C)		ASTM D 573 - 88
- Hardness retained	100%±5%	
- Compressive strength retained	100%±5%	
- Tensile strength retained	100%±5%	
- Elongation retained	100%±5%	

2) Rubber grade rings shall only be used in paved areas.

3) Tapered rubber grade rings shall be used to accommodate sloped paved surfaces.

13. Cement Grout:

a. Cement grout shall be non-shrink non-metallic.

b. Use Type I cement where grout is not in contact with sewage.

c. Use Type II (Sulfate Resistant) where grout is in contact with sewage.

14. Waterproofing Mortar:

a. Material composition meeting the requirements of ASTM C270, Type M with waterproofing admixture included.

b. Apply in accordance with manufacturer's instructions.

c. Acceptable Manufacturers.

1) Medusa Waterproofing Paste or Powder; Medusa Cement Company

2) Hydralite, Grace Construction Material.

3) Hydrolox, Chem Master Corporation.

15. Epoxy Bonding Compound

a. Provide a high-modulus, low viscosity, moisture insensitive epoxy adhesive having the following characteristics:

1) Mix Ratio: 100 percent solids, two component; mixed one part by volume component B to two parts by volume component A.

2) Ultimate Compressive Strength: 13,000 psi after cure at 73°F and 50 percent relative humidity determined in accordance with ASTM D695.

3) Acceptable Manufacturers:

a) Sikadur Hi-Mod; Sika Corporation

b) Epoxtite Binder; A. C. Horn, Inc.

c) 452 Epoxy System; Euclid Chemical Company

2.2 MANHOLE INSERTS

A. Material And Design

1. The insert shall be manufactured from corrosion proof material suitable for atmospheres and conditions commonly found in wastewater collection systems. The insert shall be made from High Density Polyethylene Copolymer material that meets ASTM Specification Designation D-1248 Class A, Category 5, Type 111. This material shall have superior stress crack resistance, combined with a high impact strength and rigidity. The insert shall have a minimum impact brittleness temperature of 105° F in accordance with ASTM D746-70. Softening temperature shall be 254° F, meeting all requirements of ASTM D 1525-70. The insert will have a tensile strength of 3700 psi, and an elongation factor 800%, meeting all requirements of ASTM D 638-71A. The thickness of the insert shall be a uniform 1/8". The insert shall be manufactured to a dimension of approximately 24" diameter to be field verified by the Contractor prior to ordering.

2. The insert shall have a corrosion resistant nylon strap installed for easy removal and reinstallation into the manhole frame.

3. The insert shall be manufactured specifically for use in collection system manholes, and shall be supplied by Parson Environmental Products, Reading, Pennsylvania, 1-800-356-9023 or approval equal.

PART 3 EXECUTION

3.1 MANHOLE CONSTRUCTION

A. General.

1. Manholes shall consist of precast reinforced concrete round riser sections and eccentric or flat slab top sections on concrete bases, complete with cast iron frames and covers and aluminum steps.
2. Contractor shall provide precast reinforced concrete bases for manholes. Manholes with drop connections shall be provided with poured-in-place concrete bases or approved alternate.
3. Manholes shall conform to the design and dimensions shown on the Detail Drawings and to the requirements specified herein.
4. Manhole tops installed within streets and ground surfaces of residential areas shall be set to match existing grade and slope.
5. Where the Drawings show manhole tops to be above existing ground in undeveloped areas and in open country, manhole shall be set at the top elevations called for on the plans, unless otherwise directed by Engineer.

B. Manhole Bases (precast concrete and monolithically poured concrete):

1. All manhole bases shall be installed on a 6-inch layer of coarse aggregate as indicated on the Detail Drawings.

C. Concrete Channels.

1. Channel configurations shall be as indicated on the Detail Drawings.
2. In manholes with more than one influent line the channels shall be properly formed as to direct the flow into the main channel and downstream.
3. All channels shall be molded in the concrete base and shall be of proper size, cross section, and to required grade; all bends in channels shall be built with the maximum possible radius. Channels shall be finished smooth in a neat and workmanlike manner with steel trowels.

D. Precast Concrete Riser and Top Sections:

1. All precast reinforced concrete risers and top sections necessary to build a completed manhole shall be furnished, and the different sections shall fit together readily to permit effective jointing. Jointing shall be in accordance with the Detail Drawings.
2. Rubber gasket joints between adjacent sections shall be carefully made in accordance with the written instructions of the manufacturer of the precast concrete manhole sections. After the joints have been made, the annular spaces which remain on the inside and outside of the joints shall be completely filled with non-shrink grout.
3. Preformed plastic sealing compound joints between adjacent sections shall be carefully made in accordance with the written instructions of the manufacturer. After the joints have been made, the preformed plastic sealing compound shall be cut or trowelled smooth across the joint on the inside of the manhole wall. Where required on the Detail Drawings, joints shall also be sealed with non-shrink grout.
4. Lifting holes shall be sealed with properly designed tapered rubber plugs. The plugs shall be driven into the lifting holes to make the holes completely water and air tight. Sealing of lifting holes with non-shrink grout will also be permitted.
5. Adjoining riser and conical top sections shall be fitted together to assure true vertical alignment of manhole steps.

E. Manhole Steps:

1. The manhole steps shall be as shown on the Detail Drawings and shall be set in a straight line on the side of the manhole and spaced as set forth on the Detail Drawings.

F. Manhole Frames and Covers:

1. Where required, final adjustment of frame to elevation shall be made using precast concrete grade rings or rubber adjustment riser. Grade elevation adjustments shall not be permitted to exceed six (6) inches.
2. Joints between precast concrete grade rings for leveling units shall be made with preformed plastic sealing compound, and shall be 1/2 inch thick and trowelled or

trimmed smooth on the inside of the manhole. In addition, the leveling units shall be sealed on the outside surface using non-shrink grout.

3. Joints between rubber grade rings for leveling units shall be made with Sikaflex compound.
4. The joint between the bottom of the frame and the top of grade ring leveling units, or the top manhole section as applicable, shall be made with preformed plastic sealing compound and shall be sealed on the outside surface using non-shrink grout.
5. Frames for all manholes shall be bolted to the manhole as shown on the Detail Drawings. Studs, nuts, and washers shall be of stainless steel. Bolts shall have a sufficient number of proper sized threads for proper connection.
6. Bolt frames to top manhole section.
7. Secure covers to frame as shown on the Detail Drawings.
8. When the final street grade exceeds 4.0% a poured concrete riser as shown in the detail drawings maybe used.

END OF SECTION 02605

SECTION 02700 - PIPED UTILITIES-SANITARY SEWERS

PART 1 GENERAL

1.1 RELATED DOCUMENTS

A. Drawings and general provision of Contract, including General and Supplementary Conditions and other Division 1 Specification Sections, apply to this Section.

1.2 WORK INCLUDED

A. Installation of Sanitary Sewers, Manholes, Specials, etc.

1.3 QUALITY ASSURANCE

A. Piping and specials specified herein shall be essentially the standard products of manufacturers who have been regularly engaged in the successful production of high quality materials of this type for at least ten years, have supplied such materials for at least five years of the ten year period, and have at least five installations in successful operation for at least five years.

B. Repair or replace defective piping or specials.

C. Sewer Line Acceptance Tests.

1. General:

a. All sewers and plugged laterals shall be air tested. Sewer lines will be tested for leakage between manholes as the work progresses. The allowable leakage rates shall apply to each reach of sewer line, manhole-to-manhole, manholes included.

b. PVC sewers installed shall be tested for deflection.

c. All sewers, including manholes, shall be inspected prior to air testing, and all visible or detectable leaks shall be repaired before testing begins. The line acceptance tests shall be made after backfilling has been completed.

d. The DEVELOPER'S CONTRACTOR shall repair all visible or detectable leaks or defects of any nature.

e. Any damage caused to properties due to sewage handling and/or sewage backup while air testing shall be the responsibility of the DEVELOPER/CONTRACTOR.

2. Testing equipment (Provided by DEVELOPER'S CONTRACTOR):

a. Air Testing:

1) Air testing shall be performed utilizing testing equipment consisting of an air-compressor and storage tank of adequate capacity; an air control panel equipped with all necessary piping, valves and pressure gages to control the rate at which the air flows to the test section and to monitor the air pressure inside the test section; and all required plugs. In order to prevent overloading the test section

with the full pressure of the compressor, the test equipment must be provided with an approved pressure relief device set to blow out at 10 psi. An extra pressure gage of known accuracy shall also be provided so that the gages of the test equipment can be frequently checked. All gages shall be oil filled and shall read to the half (1/2) P.S.I. increment.

b. Deflection Testing:

1) Deflection testing shall be performed using a rigid *"Go-No Go"* device. A hydro-cleaner or blower/parachute device, complete with string lines, shall be provided for attaching pull lines.

2) All sewer lines shall be tested. Testing shall be performed after the line as been backfilled for a minimum of thirty (30) days.

3. Cleaning:

a. No debris, silt, or other material shall enter existing sewers. It shall be the responsibility of DEVELOPER'S CONTRACTOR to have the pipe clean at the time of air testing and deflection testing. If required, the pipe shall be cleaned by hydro-flushing with water or by passing through the pipe a full gauge squeegee.

4. Air Testing Procedure:

a. All wyes, tees, or end of side sewer stubs placed for future connections shall be plugged with flexible-joint caps, or acceptable alternate, securely fastened to withstand the internal test pressure. Plugs or caps shall be readily removable.

b. Testing of any sewer may not be conducted until backfill and compaction are completed. Each pipe section shall be tested with low pressure air at 4.0 psi greater than the average back pressure of any groundwater that may submerge the pipe. At least two minutes shall be allowed for temperature stabilization, adding only the amount of air required to maintain pressure.

c. The pipe shall hold the required test pressure for the duration prescribed in the air test table (Table 1) attached to this section.

d. Repair and retest sections of sewer not meeting test requirements.

5. Deflection Testing Procedure:

a. Use Go-No-Go device in accordance with pipe manufacturer's requirements.

b. Unless specified otherwise by ENGINEER, long term pipe deflection (reduction in vertical inside diameter) shall not exceed 5 percent.

c. Repair and retest sections of sewer not meeting test requirements. (Repair: Removal and replace section that does not meet test requirements.)

D. Minimum Testing Requirements.

1. Securely fasten and brace all line plugs in the pipe section being tested so that none of the plugs is suddenly released when the compressed air is applied to the pipe section. Limit the internal pressure in the sewer line to 5 psi greater than the average back pressure of any ground water that may submerge the pipe.
2. All gages, air piping manifolds and valves of the air testing equipment shall be located above ground at the top of the trench.
3. No one shall be allowed in the manhole during testing.
4. Special care shall be exercised during removal of plugs; and the pressure in the piping of the test section shall be completely relieved before any plug shall be removed.

1.4 SUBMITTALS

A. Submit shop drawings or catalogue cuts, as appropriate, for materials listed under Article 2.1 of this Section. Submit only those materials that are actually to be used in the work. These will usually be as follows:

1. Pipe and Fittings.
2. Stone Certifications.
3. Gaskets, Adapters, Cleanout Covers and Assessories and Other Appurtenances.
4. Detection Tape.

B. Submit manufacturer's Certification of Compliance in accordance with Section 01300.

C. Make submittals prior to start of construction. Make submittals to ENGINEER.

1.5 DELIVERY, STORAGE, AND HANDLING

A. Deliver, store and handle the piping, manholes, manhole frames and covers and appurtenances in accordance with the manufacturer's recommendations, and in such manner as to protect the materials from damage.

B. Pipe and related materials shall be loaded and unloaded by lifting with hoists or skidding so as to avoid shock or damage. Under no circumstances shall such material be dropped or skidded against pipe already on the ground.

C. Pipe and related materials shall at all times be handled with care to avoid damage. The interior shall be kept free from dirt and foreign matter. All pipe, manholes, manhole frames and covers and appurtenances shall be carefully lowered or raised into place with suitable equipment in a manner that will prevent damage to the material. Under no circumstances shall pipe or accessories be dropped or dumped.

D. Manholes, and all related materials, shall be thoroughly inspected for defects prior to their being installed. Any defective, damaged, or unsound material, shall be repaired or replaced as directed.

E. All lumps, blisters, and excess coating shall be removed from the ends of each pipe. The joints shall be wire brushed and wiped clean, dry and free from oil and grease before the pipe is installed.

PART 2 PRODUCTS

2.1 MATERIALS

A. Ductile Iron Pipe

1. Pipe.

a. Ductile iron pipe shall be centrifugally cast, annealed ductile iron manufactured in accordance with ANSI A21.51.

b. Pipe joints shall be push-on or mechanical joint and shall conform to ANSI specification A21.11. Furnish joints with all required accessories.

2. Fittings.

a. Furnish fittings in accordance with ANSI 21.10 250 psi rating or ANSI 21.53, 350 psi rating.

b. Joints shall be mechanical joint in accordance with ANSI A21.11. Furnish joints with required accessories.

3. Cement and Mortar Lining.

a. Cement and Mortar line all pipe and fittings in accordance with ANSI A21.4.

b. Paint seal coat in accordance with ANSI A21.4.

4. Tar Coat exterior of ductile iron pipe and fittings.

5. Furnish gaskets in accordance with ANSI A21.11.

B. PVC Pipe.

1. 4" - 15" Diameter.

a. Unplasticized polyvinyl chloride (PVC) gravity sewer pipe and fittings with integral wall bell and spigot joints meeting ASTM D-3034 specification for Type PSM Poly Vinyl Chloride (PVC) Sewer Pipe and Fittings, Standard Dimension Ratio (SDR) 35, or ASTM F789.

b. The pipe shall be joined with an integral bell, bell-and-spigot type rubber gasketed joint. Rubber gasket shall conform to ASTM F 477. The rubber gasket shall be compressed radially on the pipe spigot to form a watertight seal in accordance with ASTM D 3212.

c. Fittings shall be made of PVC having a cell classification of 12454B or 12454C or as defined in ASTM D 1784. Fabricated fittings with solvent cemented components shall be made in accordance with ASTM D 2855 and taking cognizance of ASTM F 402.

d. Pipe stiffness at 5% deflection shall be 46 PSI for all pipe diameters when tested in accordance with ASTM D 2412.

e. Air testing and deflection testing to be performed in accordance with the requirements of this section.

2. 18” - 27” Diameter.

a. Unplasticized polyvinyl chloride (PVC) gravity sewer pipe and fittings with integral wall bell and spigot joints meeting ASTM F 679 specification for “Poly Vinyl Chloride (PVC) Large Diameter Plastic Gravity Sewer Pipe and Fittings”, or ASTM 794 specification for Poly Vinyl Chloride (PVC) Large Diameter Ribbed Gravity Sewer Pipe and Fittings Based on Controlled Inside Diameter.

b. The pipe shall be joined with an integral bell, bell-and-spigot type rubber gasketed joint. Rubber gasket shall conform to ASTM F477. The rubber gasket shall be compressed radially on the pipe spigot to form a watertight seal in accordance with ASTM D 3212.

c. Fittings shall be made of PVC having a cell classification of 12454B or 12454C (only) as defined in ASTM D 1784. Fabricated fittings with solvent cemented components shall be made in accordance with ASTM D 2855 and taking cognizance of ASTM F402.

d. Pipe stiffness at 5% deflection shall be 46 PSI for all pipe diameters when tested in accordance with ASTM D 2412.

e. Air testing and deflection testing to be performed in accordance with the requirements of this section.

C. Pipe Couplings and Adapters

1. All couplings and adapters shall be solid sleeve.
2. Constructed of materials which will pass the strength and chemical requirements of ASTM C954.
3. Approved manufacturers.

a. Mission, Corona, CA
b. Calder, Gardner, CA
c. Dresser, Bradford, PA

D. Flexible Pipe Coupling with Anti-Shear Stainless Steel Collar

1. Provide flexible pipe couplings with anti-shear stainless steel collar designed for differing pipe material connection: and for transition/reducing conditions of differing pipe material connections.
2. Coupling will be PVC material which meets the performance requirements of Commercial Standard Specification CS 226-59. Couplings designed for pipe outside diameter coupling shall incorporate recesses to contain the stainless steel bands. Couplings provided with pre-assembled type 305 stainless steel bands.
3. Use flexible pipe couplings only where directed by the Engineer.
4. Approved manufacturers.

a. FERNCO Inc., Distributed by the General Engineering Company

E. Wye Connections.

1. PVC material to be ASTM D 3034, SDR-35.
2. All wyes shall bear the manufacturer's identifying mark and size.

F. Sweeping Tee

1. PVC material to be ASTM D 3034, SDR-35.
2. All sweeping tee's shall bear the manufacturer's identifying mark and size.
3. Sweeping Tees will be as manufactured by
   a. Plastic Trends, MI
   b. Specified Fittings, WA

G. Cleanouts.

1. Building sewer construction and/or building sewer replacement shall be installed in accordance with the latest Township code.
2. Cleanouts shall be installed at all changes in vertical and horizontal directions greater than 45 degrees. Where changes in direction are less than 45 degrees, cleanouts shall be located every 90 feet.
3. On new lateral construction and/or lateral replacement, sweeping tees (test tee) shall be installed as indicated on the Detail Drawings.
4. All service lateral cleanout piping (vertical stack piping), shall be a minimum of six (6) inches in diameter. Cleanouts shall have a threaded cap. Glued caps or plugs are not acceptable.
5. Cleanouts located in paved areas or in areas where vehicular traffic may occur require a cleanout cover to be installed. Acceptable manufacturers:
   a. General Engineering Company, Frederick, MD.
   b. Or approved equal.

H. Detection Tape

1. Detection tape shall be a metal detectable reinforced underground utility marking tape with a 50 gauge (0.0005") solid aluminum foil core with permanent printing under a mylar layer.
2. The detection tape shall consist of a minimum 9.0 mil (0.0009") overall thickness, coated and colored cross-woven polyethylene, with no less than 2,500 lbs. of tensile break strength per 12" width and color coded suitable for direct burial.
3. Detection tape shall be 2-inch width minimum.
4. The detection tape shall be installed on top of the pipe bedding or a maximum of 12" above the pipe (see Trench Detail).

PART 3 EXECUTION

3.1 LAYING PIPE

A. General.

1. Following trench excavation, pipe laying shall proceed upgrade with pipe laid carefully, hubs upgrade, spigot ends fully centered into adjacent hubs, and true to lines and grades given.
2. Each section of pipe shall rest upon 6”of approved stone pipe bedding for the full length of its barrel, with recesses excavated to accommodate bells and joints. Each pipe shall be firmly held in position so that the invert forms a continuous grade with the invert of the pipe previously placed.

    a. Utilize portable laser to establish grades of sewers, laser shall be used in accordance with manufacturer's written instructions.

        1) Grade shown on Drawings is that of Sewer invert. Tolerance ± ¼-inch.

3. Under no conditions shall pipe be laid in water, on subgrade containing frost, and/or when trench conditions are unsuitable for such work. In all cases, water shall be kept out of the trench until concrete cradles, supports, encasement, or saddles, where used, and materials in the joints have hardened.
4. Any pipe that has its grade or joint disturbed after laying shall be taken up and relaid. Any section of pipe already laid and found to be defective shall be taken up and replaced with new pipe.
5. Walking or working on top of the completed pipeline, except as may be necessary in backfilling or tamping, shall not be permitted until the trench has been backfilled to a height of at least 2 feet over the top of the pipeline.
6. Maintain pipelines free and clear of debris during the progress of the work.
7. At times when pipelaying is not in progress, the open ends of the pipe shall be closed by watertight plug.
8. Diversion of Sewage during Construction.

    a. Sewage flowing in existing sewer shall be temporarily plugged or diverted around or through the construction be means of by-pass pumping, fluming, or any other means acceptable to Engineer.

        1) If by-pass pumping is required, provide stand-by pump equivalent to the largest by-pass pump in service.

    b. At completion of each work day tie sewage back into existing sewer. Tie-in shall be covered so there is no visible sewage.
    c. Prior to beginning work, the DEVELOPER’S CONTRACTOR shall have on hand all requird materials necessary to accomplish the work.
    d. DEVELOPER’S CONTRACTOR shall be responsible for any property damage caused by sewage handling.

9. DEVELOPER’S CONTRACTOR shall maintain a log of service connection locations and lateral pipe lengths and sizes. The locations shall be based upon sewer line stationing and shall indicate if the lateral is in service or plugged.

B. PVC Pipe.

1. Inspect pipe and fittings for defects or damage prior to lowering into the trench.
2. Install PVC pipe and fittings in accordance with manufacturer's written instructions.
3. Do not kick or throw PVC pipe and fittings into the trench.
4. Use of hydrohammer for compaction will not be permitted within four (4) feet of the top of the pipe.

3.2 CLEANOUTS

A. Service Laterals and Building Sewers.

1. All service laterals and building sewers shall have cleanouts located not more than 90 feet apart.

B. Change in Direction.

1. Cleanouts shall be installed in accordance with the International Plumbing Code (2000) requirements. Access shall be provided to all cleanouts.

C. Traffic Boxes.

1. Traffic boxes shall be installed on all cleanout stacks located in grass areas or paved areas.

3.3 CONCRETE FOUNDATIONS

A. Where required by ENGINEER, or where shown on the Drawings, pipe shall be placed on a formed concrete cradle, or unformed concrete shall be placed around pipes for bedding and encasement.

B. Concrete cradles shall consist of structures requiring forms and be composed of concrete, built-in trenches to support pipes, and to the dimensions shown on the Detail Drawings.

C. Concrete bedding and encasement shall be composed of concrete placed in trenches, without forms as pipe bedding, or encased around pipes, to the dimensions and in the locations indicated on the Detail Drawings.

3.4 AUTHORITY

A. The AUTHORITY reserves the right to retest at the DEVELOPER'S expense, any piping throughout the duration of the Construction Period.

B. Make repairs to piping found defective by such AUTHORITY conducted tests.

C. The AUTHORITY will make a final inspection of the installed sewer system upon completion of the street construction, including paving. This inspection will be made to verify final grade of manholes frames and covers and that the interior of the manholes are clean and free from laeks.

D. The warrenty period will begin with all conditions being satisfactory to the AUTHORITY in its final inspection and Dedication.

E. Before eighteen (18) months the AUTHORITY's final inspection and approval of DEVELOPER installed sewer extension, a re-inspection will be performed to verify that the manhole sand sewer mains continue to be free of leaks and defects. Defects found shall be repaired as if under the terms of the original contract.

END OF SECTION 02700

TABLE 1
AIR TEST TABLE

SPECIFICATION TIME REQUIRED
FOR SIZE AND LENGTH OF PIPE INDICATED

Pipe Diameter (in.)	Minimum Time (min:sec)	Length for Minimum Time (ft.)	Time for Longer Length (sec x Length, ft.)			Specification Time for Length (l) Shown (min:sec)							
						100 ft.	150 ft.	200 ft.	250 ft.	300 ft.	350 ft.	400 ft.	450 ft.
4	1:53	597	0.19	x	Length	1:53	1:53	1:53	1:53	1:53	1:53	1:53	1:53
6	2:50	398	0.427	x	Length	2:50	2:50	2:50	2:50	2:50	2:50	2:51	3:12
8	3:47	298	0.76	x	Length	3:47	3:47	3:47	3:47	3:48	4:26	5:04	5:42
10	4:43	239	1.187	x	Length	4:43	4:43	4:43	4:57	5:56	6:55	7:54	8:54
12	5:40	199	1.709	x	Length	5:40	5:40	5:42	7:08	8:33	9:58	11:24	12:50
15	7:05	159	1.671	x	Length	7:05	7:05	8:54	11:08	13:21	15:35	17:48	20:02
18	8:30	133	3.846	x	Length	8:30	9:37	12:49	16:01	19:14	22:26	25:38	28:51
21	9:55	114	5.235	x	Length	9:55	13:05	17:27	21:49	26:11	30:32	34:54	39:16
24	11:20	99	6.837	x	Length	11:24	17:57	22:48	28:30	34:11	39:53	45:35	51:17
27	12:45	88	8.653	x	Length	14:25	21:38	28:51	36:04	43:16	50:30	57:42	46:54

SECTION 02720 – SERVICE LATERAL AND BUILDING SEWER INSTALLATION

PART 1 GENERAL

1.01 WORK INCLUDED

A. Installation of sanitary sewer service laterals and building sewers.

1.02 DEFINITIONS

A. Service Lateral – That part of the sewer pipe extending from the sewer main to a point near the end of right-of-way. The service lateral diameter will be six (6) inches in diameter.
B. Building Sewer – That part of the sewer pipe that extends from the end of the building to the upstream end of the service lateral. STA requires this pipe to be at least four (4) inches in diameter.
C. The service connection is the point between the service lateral and the building sewer pipes. This connection is typically at the right-of-way line.

1.03 QUALITY ASSURANCE

A. Piping and specials specified herein shall be essentially the standard products of manufacturers who have been regularly engaged in the successful production of high quality materials of this type for at least 10 years, have supplied such materials for at least 5 years of the 10-year period, and have at least 5 installations in successful operation for at least 5 years.
B. Repair or replace defective piping or specials.

C. Pipe Acceptance Tests.
1. General.

a. Laterals shall be tested for leakage between test tees after lateral installation has been completed. The allowable leakage rate shall be zero.
b. All laterals shall be inspected prior to air testing. All visible or detectable leaks shall be repaired before air testing begins. The line acceptance tests shall be made after backfilling has been completed.
c. The DEVELOPER'S CONTRACTOR shall repair all visible and detectable leaks or defects of any nature.

2. Testing Equipment. (Supplied by DEVELOPER'S CONTRACTOR)
a. Air Testing.
1) Air testing shall be performed utilizing test equipment consisting of an air compressor and storage tank of adequate capacity; an air control panel equipped with all necessary piping, valves and pressure gauges to control the rate at which the air flows to the test section and to monitor air pressure inside the test section; and all required plugs. To prevent overloading the test section

with the full pressure of the compressor, the test equipment must be provided with an approved pressure relief device set to blow out at 10psi. An extra pressure gauge of known accuracy shall also be provided to frequently check the test equipment gauges. The air testing equipment and all accessories shall be subject to approval of AUTHORITY.

3. Cleaning. (Performed by DEVELOPER'S CONTRACTOR)

   a. No debris, silt or other material shall enter the lateral. It shall be the responsibility of the DEVELOPER'S CONTRACTOR to have the pipe cleaned at the time of air testing. If required, the pipe shall be cleaned by hydro flushing with water or by passing through the pipe a full gauge squeegee in a manner approved by the AUTHORITY.

4. Air Testing Procedure

   a. All wyes, tees, sweeping tees or end of lateral and/or building sewer placed for future connection shall be plugged with flexible caps, or acceptable alternate, securely fastened to withstand the internal test pressure. Plugs or caps shall be readily removable.
   b. Testing of any sewer may not be conducted until the entire line has been completed. Each pipe section shall be tested with low pressure air at 4 psi greater than the average back pressure of any groundwater that may submerge the pipe. At least two (2) minutes shall be allowed for temperature stabilization, adding only the amount of air required to maintain pressure. Test shall be allowed to run for five (5) minutes, excluding the two (2) minutes stabilization, if any air had to be added.
   c. Repair and retest sections of lateral not meeting test requirements.
   d. Air testing shall be performed utilizing test equipment consisting of an air compressor and storage tank of adequate capacity; an air control panel equipped with all necessary piping, valves and pressure gauges to control the rate at which the air flows to the test section and to monitor the air pressure inside the test section; and all required plugs. The pressure gauge for measuring internal pipe pressure shall be an oil-filled gauge measuring from zero to 20 psi, in one-pound increments. To prevent overloading the test section with the full pressure of the compressor, the test equipment must be provided with an approved pressure relief device set to blow out at 10 psi. An extra pressure gauge of known accuracy shall also be provided to frequently check the test equipment gauges. The air testing equipment and all accessories shall be subject to approval by AUTHORITY.

D. Minimum Testing Requirements

1. DEVELOPER'S CONTRACTOR shall take care to securely fasten and brace all line plugs in the pipe section being tested so that none of the plugs are suddenly released when the compressed air is applied to the pipe section.
2. DEVELOPER'S CONTRACTOR shall be responsible for any damages caused by the internal pressurizing of the sewer line.
3. All gauges, air piping manifolds and valves of the air testing equipment shall be located above ground at the top of the trench.
4. Special care shall be exercised during removal of plugs. The pressure in the piping of the test section shall be completely relieved before any plug shall be removed.

1.04 SUBMITTALS

A. Submit shop drawings or catalog cuts, as appropriate, for materials listed under Article 2.01 of the Section. Submit only those materials that are actually to be used in the Work. These materials generally include the following:

1. Pipe and Fittings
2. Cleanout caps
3. Cast Iron Protection Castings
4. Gaskets, couplings, adapters and other appurtenances.

B. Make submittals to AUTHORITY prior to start of construction.

1.05 DELIVERY, STORAGE AND HANDLING

A. Deliver, store and handle piping, fittings and appurtenances in accordance with manufacturer's recommendations, and in such manner as to protect the materials from damage.
B. Pipe and related materials shall be loaded and unloaded by lifting with hoists or skidding so as to avoid shock or damage. Under no circumstances shall such material be dropped or skidded against pipe already on the ground.
C. Pipe and related materials shall at all times be handled with care to avoid damage. The interior shall be kept free from dirt and foreign matter. All pipe and appurtenances shall be carefully lowered or raised into place with suitable equipment in a manner that will prevent damage to the material. Under no circumstances shall pipe or accessories be dropped or dumped.
D. All lumps, blisters and excess coating shall be removed from the ends of each pipe. The joints shall wire brushed and wiped clean and dry, and free from oil and grease before the pipe is installed.

PART 2 PRODUCTS

2.01 MATERIALS

A. PVC pipe (4, 6 or 8 inch Diameter)

1. Pipe and Fittings.

a. Unplasticized polyvinyl chloride (PVC) gravity sewer pipe and fittings with integral wall bell and spigot joints meeting ASTM D3034 specification for Type PSM PVC Sewer Pipe and Fittings, Standard Dimension Ratio (SDR) 35, or ASTM F 789. (For gasket joints only)
b. The pipe shall be joined with an integral bell, bell-and-spigot type rubber gasketed joint. Rubber gasket shall conform to ASTM F 477. The rubber gasket shall be compressed radially on the pipe spigot to form a watertight seal in accordance with ASTM D3212.
c. Fittings shall be made of PVE having a cell classification of 12454B or 12454C (only) as defined in ASTM D1784.
d. Pipe stiffness at 5 percent deflection shall be 46 psi for all pipe diameters when tested in accordance with ASTM D2412.

2. Saddles

a. Approval from the AUTHORITY for the use of a saddle must be obtained prior to installation. The use of saddles will be on a case by case basis.
b. All holes cut into the mainline shall be cored by using a coring machine.
c. Gasketed PVC bell inlet connection with stainless steel bands, clamps, bolts and fittings.
d. PVC material shall conform to ASTM D3034, SDR 45.
e. All tee saddles shall bear the manufacturer's identifying mark and size.
f. Approved products and manufacturers.
1) "Sealtite" by General Engineering Company, Frederick, MD.
2) Engineer Approved Equal.

B. Schedule 40 PVC with Solvent Weld Joints (Schedule 40 PVC will only be used when directed by the Authority)

1. Pipe and Fittings

a. Unplasticized polyvinyl chloride (PVC) gravity sewer pipe and fittings shall conform to ASTM D1785 and ASTM D 2466 respectively. Jointing shall conform to ASTM D2672.
b. Pipe joints shall be made in accordance with ASTM D2855. Cement shall be in accordance with ASTM D2564.

c. All joints shall have a minimum set time prior to backfilling. Minimum set times are as follows.
   1) 30 minutes min. @ 60 to 100 degrees F
   2) 1 hour min. @ 40 to 60 degrees F
   3) 2 hours min. @ 20 to 40 degrees F
   4) 4 hours min @ 0 to 20 degrees F

2. Schedule 40 pipe shall only be used to repair existing schedule 40 pipe.

C. Cast Iron Pipe (4 and 6 Inch Diameter).

1. Pipe and Fittings.

   a. Cast iron gravity sewer pipe and fittings of either "Service Weight" or "Extra Heavy" with integral wall bell and spigot joints meeting ASTM A74 specification for cast iron gravity sewer pipe and fittings.
   b. Pipe shall be joined with an integral bell, bell-and-spigot type rubber gasket joint conforming to ASTM C564. Rubber gasket shall be compressed radially on the pipe spigot to form a watertight seal.
   c. Fittings shall be made of either "Service Weight" or "Extra Heavy" cast iron and shall be of the bell-and-spigot type having a rubber gasket, which meets ASTM A74, and creating a watertight seal.

D. Rigid Pipe Couplings

1. SDR 35 PVC in-line rigid pipe couplings with rubber gaskets
2. Fittings manufactured in accordance with ASTM D3034 and D1784.
3. Rubber gaskets for fitting shall conform to ASTM F477.
4. Approved manufacturers.
   a. GPK Products, Inc., Fargo, ND.
   b. Or equal

E. Flexible Pipe Couplings with Anti-Shear Stainless Steel Collar: Provide flexible pipe couplings with anti-shear stainless steel collar designed for differing pipe material connection; and for transition/reducing conditions of differing pipe material connections. **Flexible rubber couplings without an anti-shear stainless steel collar are NOT permitted.** Flexible rubber couplings are not permitted for use in re-connecting SDR 35 PVC pipe to SDR 35 PVC pipe.

1. Coupling Construction: Virgin PVC material which meets the performance requirements of Commercial Standard Specification CS 226-59. Couplings designed for pipe outside diameter coupling shall incorporate recesses to contain the stainless steel bands. Couplings provided with pre-assembled type 305 stainless steel bands.

2. Acceptable Manufacturers:

   a. FERNCO Inc., Distributed by the General Engineering Company.

b. Or Equal.

F. Cleanouts.

1. Building sewer construction and/or building sewer replacement shall be installed in accordance with the latest Township code.
2. Test tees shall be installed as indicated on appropriate Service Lateral Detail.
3. Cleanouts shall be installed at all changes in vertical and horizontal directions greater than 45 degrees. Where changes in direction are less than 45 degrees cleanouts shall be located every ninety (90) feet.
4. On new service lateral construction and/or lateral replacement test tees shall be installed as indicated on the Detail Drawings.
5. All cleanout piping (vertical stack piping) shall be the same pipe size as the service lateral or building sewer.
6. Cleanouts shall have a threaded cap or plug.
7. All cleanouts shall have a cast iron cleanout box and cover plate over it.

PART 3 EXECUTION

3.01 LAYING PIPE

A. **There shall be a 10 foot horizontal separation between water service and service lateral/building sewer.**

B. Pipe to pipe connections shall be made in accordance with Pipe Reconnection Detail.

C. Following trench excavation, pipe laying shall proceed upgrade with pipe laid carefully, hubs upgrade, spigot ends fully centered into adjacent hubs, and true lines to grades given.

D. Provide test tees as indicated on Detail Drawings.

E. Each Section of pipe shall rest upon the pipe bed for the full length of its barrel, with recessed excavated to accommodate bells and joints. Each pipe shall be firmly held in position so that the invert forms a continuous grade with the invert of the pipe previously placed.

1. Lateral pipe having an inside diameter of 4 inches shall be laid at a grade not less than ¼ inch per foot.
2. Lateral pipe having an inside diameter of 6 inches shall be laid at a grade not less than 1/8 inch per foot.

F. Under no conditions shall pipe be laid in water, on subgrade containing frost and/or when trench conditions are unsuitable for such work. In all cases, water shall be kept out of the trench until concrete cradles, supports, encasements or saddles, where used, and materials in the joints, have hardened.

G. Any pipe that has its grade or joint disturbed after laying shall be taken up and relaid. Any section of pipe already laid and found to be defective shall be taken up and replaced with new pipe.

H. Walking or working on top of the completed pipeline, except as may be necessary in backfilling or tamping, shall not be permitted until the trench has been backfilled to a height of at least 2 feet over the top of the pipeline.

I. Maintain pipelines free and clear of debris during the progress of the Work.
J. At time when pipe laying is not in progress, the open ends of the pipe shall be closed by watertight plug.
K. Inspect pipe and fittings for defects or damage prior to lowering in the trench.
L. Install pipe and fittings in accordance with manufacturer's written instructions.
M. Use of a hydro-hammer for compaction shall not be permitted within a minimum of 4 feet of the top of the pipe.
N. Install pipe couplings and adapters in accordance with manufacturer's written instructions.

3.02 CONNECTION OF NEW SERVICE LATERAL TO EXISTING SEWER MAIN

A. Connection of the service lateral to the sewer main shall be made by removing a section of the sewer main and replacing it with an SDR 35 PVC wye branch connection or sanitary tee and then reconnecting this to the sewer main with rigid PVC gasketed couplings.
B. Pipe to pipe connections shall be made in accordance with Pipe Reconnection Detail.
C. Test tees for air testing the service lateral and/or building sewer shall be installed at the service connection between the building sewer and the service lateral or at the right-of-way line.
D. All sewer laterals shall pass an air test before AUTHORITY acceptance.

3.03 CLEANOUTS

A. All service laterals and building sewers shall have cleanouts located not more than 90 feet apart.

B. Changes in direction.

1. Building sewer construction and/or building sewer replacement shall be installed in accordance with the latest Township code. Access shall be provided to all cleanouts.
2. All cleanouts are to have a cast iron protection casting installed regardless of location in paved areas or unpaved areas.

3.04 CLEANING

A. No debris, silt or other material shall be allowed in the lateral. If required, the pipe shall be cleaned by hydro-flushing with water or by passing through the pipe a full gauge squeegee in a manner approved by the AUTHORITY.

3.05 AIR TESTING

A. All piping is to be air tested in accordance with 1.03 Quality Assurance.

END OF SECTION

SECTION 02725 – PIPED UTILITIES-FORCE MAINS AND PRESSURE SEWERS

A. General

1. Pressure pipe shall be polyethylene plastic pipe. The diameter shall be sufficient to convey the calculated flow. The developer's engineer shall size the diameter required and provide their calculations to the Authority.
2. Pressure pipe to DR 26
3. ***Schedule 40 or Schedule 80 PVC is not permitted.***

4. Approved Manufacturers:
   a. Plexco Plastic Piping Systems
   b. Engineer Approved equal

END OF SECTION

SECTION 02831 – RIGHT-OF-WAY GATE

PART 1 GENERAL

1.1 RELATED DOCUMENTS

A. Drawings and general provisions of Contract, including General and Supplementary Conditions and other Division 1 Specification Sections, apply to this Section.

2.2 RIGHT-0f-WAY GATE

A. General Requirements: Install a gate system of the type specified herein on off street rights-of-ways to prevent unauthorized entry. The exact location for the gate system shall be selected by the AUTHORITY.

B. Gate System Design: Provide a chain link fence gate with hinge and locking posts, as well as pedestrian access post, in accordance with the design indicated on the drawing accompanying this Addendum.

C. Gate Materials:

1. Galvanized Chain Link Fabric: No. 9 gauge galvanized steel wire having a hot-dipped zinc (Class1) coating of 1.2 ounce per square foot of wire surface. Fabric interwoven in a two-inch mesh with top and bottom salvage edges both twisted and barbed. Fabric shall conform to ASTM A 392.

2. Gate Frame Work: Ferrous metal elements of the gate frame and accessories shall receive zinc (Grade E) coating by the hot dip process after fabrication. Metal coated to 1.8 oz. Of zinc coating per square foot of surface, in a smooth finish, free from dross, uncoated spots and foreign materials, in accordance with ASTM A 123.

a. Provide framework of roll-formed or tubular members fabricated from 50,000 psi minimum yield strength steel. Member sizes shall be adequate section and weight for the gate leaf width indicated.

b. Provide stretcher bars of one piece 3/16 X ¾ inch bar material and of length equal to full height of the gate fabric. Provide ½ inch wide stretcher bar bands spaced not more than 15 inches O.C. to secure stretcher bars to gate frame work.

3. Hinge, Locking and Pedestrian Access Posts: Provide pressure treated timbers of the nominal dimensions indicated. The timbers shall bear the appropriate grade and mill stamp showing product compliance with U.S. Dept. of Commerce Product Standard PS-20-70.

a. Pressure Treatment: Wolman CCA Type C oxide preservative treatment for ground contact by the pressure process in accordance with AWPA (American Wood Preservers Association) Standard P-5, and preservative injected into the wood at 0.60 pounds per cubic foot of wood.

Preservative density determined by assay in accordance with AWPA Standard C-1.

3.1 EXECUTION

A. Installation: Set hinge and locking posts and pedestrian access post by the posthole method. Powered augers may be used so long as the holes are made true and not over excavated. Open cut excavations for setting of posts is not acceptable.

1. Postholes shall be large enough to accept the posts with enough annular space to allow complete backfilling with sand. Compact the sand backfill to such extent to eliminate post movement.

2. Mount the chain link fence gate using gate hardware designed specifically for mounting in wood. Set hasp and keeper latch to allow for easy opening and closing operation. Hasp lock provided by the AUTHORITY.

END OF SECTION 02831

Division 11

Equipment

SECTION 11330 – ABOVE GROUND PUMP STATIONS

PART 1 GENERAL

1.1 WORK INCLUDED

A. Above Ground Pump Station and Accessories

B. Pump force main

1.2 REQUIREMENTS FOR ABOVE GROUND PUMP STATIONS

A. DEVELOPERS using above ground pump stations shall meet the following requirements:

1. Receive station approval from AUTHORITY'S ENGINEER.

2. The AUTHORITY has preferences to the types of pumps used for above ground stations. The DEVELOPER is reminded to consult with the AUTHORITY prior to design of any station.

3. Meet the requirements set forth in this Section and in the Manual.

4. DEVELOPER shall provide backup power to all proposed pump stations.

B. Above Ground Pump Station Applications.

1. For each project where the use of submersible pumps have been proposed, the DEVELOPER shall submit for approval by the ENGINEER/AUTHORITY an summary of information containing the following information:

a. Applications can be obtained from the AUTHORITY.

b. Name and address of DEVELOPER.

c. Project location.

d. Justification for using submersible pumps. Provide a narrative justifying the use of submersible pumps including a description of why it is not economically and/or technically feasible to use conventional gravity sewers.

e. Name of manufacturer and model number of equipment to be used. (Only manufacturer's and models that are approved by ENGINEER and AUTHORITY)

f. Site plan drawings showing the location of proposed pump station and location of the proposed force main.

PART 2 MATERIALS

2.1 ABOVE GROUND PUMP STATION

A. General.

1. The station shall meet at a minimum all the design criteria as indicated in the DEP Domestic Wastewater Facilities Manual.

2. A minimum of two (2) pumps shall be provided. However, pumping capacity must be provided so that if the largest pump were out of service the peak flow would still be pumped. Pumps shall be of the suction lift variety.

3. Pre-cast concrete wet well with a lockable stainless steel access hatch. The wet well shall also include a stainless steel ladder with an attached safety device.

4. Heated brick and block building with exterior lighting.

5. Shingled roof

6. Lifting devices including beam and/or a removable hoist for removal of pumps.

7. Emergency backup power with an automatic transfer switch.

8. Emergency dialer system with phone service.

9. Visible exterior alarm light.

10. Water service both inside and outside of the building.

11. All sewage piping including suction and discharge shall be cement-lined class 52 ductile iron pipe.

12. All force main piping shall be cement-lined class 52 ductile iron pipe.

13. Mercury bubbler level control system with an emergency high-level float.

14. Air release valve(s) as required.

15. All other reasonable requests of the AUTHORITY.

B. Submittals

1. Design calculations indicating adequate pump capacity for future conditions. The Engineer shall review and provide approval of the design calculations to assure adequate pump capacity.

2. Site plan and elevation drawings showing:

   a. Location of building(s)
   b. Location and elevations of gravity sewers to the station
   c. Location and elevations of the force main
   d. Location and elevations of any air release valves that may be necessary

3. Calculations justifying pump horsepower and impeller diameter selection.

4. Calculations justifying the anti-flotation system.

5. Shop drawings on all equipment and materials to be provided in the station.

PART 3 EXECUTION

3.1 Start-up Testing

A. The DEVELOPER is responsible for all start up testing of the new station.

END OF SECTION 11330

SECTION 11400 – SUBMERSIBLE GRINDER PUMP STATIONS

PART 1 GENERAL

1.01 WORK INCLUDED

A. Submersible Grinder Pump Station and Accessories

B. Grinder pump force main

1.02 REQUIREMENTS FOR SUBMERSIBLE GRINDER PUMP STATIONS

A. Submersible grinder pump stations shall meet the following requirements:

1. Receive Grinder Station approval from AUTHORITY'S ENGINEER.

2. Use only equipment on ENGINEER's List of Approved Grinder Pump Station Equipment.

3. Meet the requirements set forth in this Section and in the Manual.

B. Grinder Pump Station Applications.

1. Details for submersible grinder pumping station are included in this manual.

2. For each project where the use of grinder pumps has been proposed, the DEVELOPER shall submit for approval by the ENGINEER an application containing the following information:

a. Applications can be obtained from the AUTHORITY.

b. Name and address of developer.

c. Project location.

d. Name of manufacturer and model number of equipment to be used. (From Engineer's List of Approved Grinder Pump Station Equipment. Refer to PART 2 – MATERIALS of this section.)

e. Site plan and elevation drawings showing the location of building(s) using grinder pump stations, location and elevations of gravity sewers to the grinder pump stations, elevations of the top and the base of each grinder pump station, and location and elevations of the pressure sewers.

f. Calculations justifying pump horsepower and impeller diameter selection.

g. Calculations justifying the anti-flotation system.

C. List of Approved Grinder Pump Station Equipment.

1. Only equipment from the ENGINEER's List of Approved Grinder Pump Station Equipment shall be acceptable. (Refer to PART 2 – MATERIALS of this section.) Said List shall be maintained by the ENGINEER and will be available upon request.

2 To be considered for placement on the approved list, the developer, supplier or supplier's representative must submit a written request to the ENGINEER to have the equipment placed on the approved list. The request must include data demonstrating that the grinder pump station equipment meets the requirements of paragraph 2.01 of this section. Information to be submitted includes but is not limited to Manufacturer's literature, illustrations, specifications and engineering data defining materials of construction, dimensions, weights, pump and motor performance and complete electrical schematics.

3. A separate request for placement on the approval list shall be made for each different type of equipment made by a given manufacturer and approval will be granted on a model number basis such that only those model numbers on the list will be acceptable. The only exception to this requirement is that a pump model not on the list will be acceptable if the pump is made by the same manufacturer a pump on the list, the two pumps differ only in motor speed, horsepower or impeller diameter and the two pumps have identical designs and materials of construction.

4. Placement on the List of Approved Grinder Pump Station Equipment does not constitute approval of performance of the equipment in actual use and satisfactory performance of the equipment shall be the responsibility of the DEVELOPER.

5. For each request to have equipment placed on the approved list, the ENGINEER will evaluate the equipment and record the time required to evaluate equipment. The DEVELOPER, supplier or other person making said request shall reimburse the AUTHORITY for the charges of the ENGINEER irrespective of whether, or not the ENGINEER accepts the equipment for placement on the list.

PART 2 MATERIALS

2.01 SUBMERSIBLE GRINDER PUMP STATION

A. General.

1. Simplex grinder pump unit may be used at each residential property location. Duplex grinder pump units shall be used at each commercial property location.

2. Grinder pump station shall be installed in a fiberglass-reinforced polyester basin for outdoor installation only. Indoor installation will not be permitted.

3. Grinder pump station shall consist of submersible grinder pump and motor, complete with fiberglass basin, junction box and all internal wiring, slide away

mounting system, mercury float switch system, high water alarm, piping and valves, and motor controlled.

4. A control panel shall be provided for each unit and installed on the exterior of each home.

5. The DEVELOPER shall furnish to the AUTHORITY one (1) spare grinder pump for each five (5) installed. In the event that one (1) to four (4) pumps are installed, the DEVELOPER shall submit a total of one (1) backup pump of identical specification.

6. The manufacturer of the grinder pump station shall be:

   a. Hydromatic Pump Co. Division
      500 East 59th Street
      Davenport, Iowa 52808
      (319) 391-8600
      Pump Model SPG 200 or SPGL 200

   b. Peabody Barnes
      651 N. Main Street
      Mansfield, OH 44902
      (419) 522-1511
      Pump Model SGV201-MS

   c. Environment One
      2773 Balltown Road
      Niskayuna, NY 12309
      (518) 346-6161
      GP 2000 Series

   d. Or approved equal. Approved equal shall be approved by the Authority.

7. The DEVELOPER shall use pumps of the same make and model in each installation that are also of the same make and model as the spare pumps provided to the AUTHORITY.

8. Abbreviations:

   a. ANSI - American National Standard Institute
   b. A.S.T.M. - American Society for Testing Materials
   c. A.W.W.A. - American Water Works Association
   d. A.A.S.H.T.O. - American Association of State Highway and Transportation Officials

B. Grinder Pump and Accessories.

1. Grinder Pump.

a. The pump unit shall be driven by a minimum 2 HP 3450 RPM motor. The DEVELOPER shall submit calculations justifying the pump horsepower and impeller diameter selected.

b. The grinder shall be capable of shearing and reducing to a fine slurry all material normally found in domestic sewage. Impeller and pump housing shall be designed with passages capable of passing all materials macerated by the grinder assembly without clogging or nuisance roping within the pump chamber. Pump discharge shall be 1-¼ inches.

c. Major components of the pump end, such as casing, impeller, seal plate and intermediate housing, shall be of ASTM class 30 cast iron construction. Pump shaft and hardware shall be 300 series stainless steel.

2. Grinder Assembly.

a. The combination centrifugal pump impeller and grinder unit shall be attached to the common motor and pump shaft made of 416 stainless steel. The grinder unit shall be on the suction side of the pump impeller and discharge directly into the impeller inlet leaving no exposed shaft to permit packing of ground solids. The grinder shall consist of two stages. The cutting action of the second stage shall be perpendicular to the plane of the first cut for better control of the particle size. The grinder shall be capable of grinding all materials found in normal domestic sewage, including plastics, rubber, sanitary napkins, disposable diapers, and wooden articles into a finely ground slurry with particle dimensions no greater than ¼ inch. Both stationary and rotating cutters shall be made of 440C stainless steel hardened to Rockwell 55C or 60C and ground to close tolerance.

3. Pump Motor.

a. The pump motor shall be a submersible type, full 2 horsepower, 3450 RPM, suitable to operate on a 230 volt, 60 Hz, single phase service. Stator windings shall be of proper size to drive the pump at any point on the pump curve. Single phase motor shall have start winding as well as run winding thermal protection to prevent stator burn out under high torque starting or operating conditions.

b. The motor shall be oil filled to lubricate upper and lower motor ball bearings as well as to act as a cooling medium for the stator.

c. The motor shall be provided with an electric sensing probe to detect any water leakage past the lower seal before damage is done to the motor. The seal probe circuit sensitivity shall not be affected by cable length between the motor and the seal probe circuitry in the control panel.

d. The stator windings shall be mounted in a corrosion-resistant, hermetically sealed submersible type housing. The Stator windings shall have Class B insulation, (130°C. or 266°F.), NEMA L design or MG1

(single phase) and shall be potted in a heat-dissipated epoxy, forming a high strength leak proof assembly to prohibit liquid or other contaminants from entering the windings.

e. The motor shall be provided with a heat sensor thermostat in the motor windings to detect an overheat condition and stop the pump. When the temperature drops to a safe level, the pump will automatically reset.

f. Motor power and control wires shall be sealed between the motor and terminal housings to prevent oil from entering the terminal housing as well as to act as a secondary barrier in the event water enters the terminal housing. A watertight compression type fitting shall provide further protection for each cable.

g. Motor housing, terminal housing, and end plate shall be constructed of cast iron of no lesser grade than Class 30. Motor shaft and hardware shall be 416 stainless steel.

4. Pump Suspension System

a. The pump suspension system shall enable the pump to be removed from the basin by lifting the grinder pump unit only. Systems requiring removal of pump hardware or breaking of unions (or couplings) will not be acceptable. Removal of grinder pump shall consist of:

1) Removing basin cover.
2) Shutting isolation valve.
3) Lifting out pump assembly.
4) Removing pump cables form easily accessible waterproof junction box.

b. Mounting system shall be serviceable without entering the basin to replace or adjust components mounted on the bottom of the basin.

c. The slide rail assembly shall consist of 304 stainless steel upper guide rail brackets with the slide rail assembly of 14 gauge 304 stainless steel. The stationary and movable portions of the hydraulically sealed discharge coupling assembly shall be machined cast iron. The upper guide rail bracket shall mount to the basin wall and position the upper end of the stainless steel guide rail while the discharge pipe positions the lower end of the guide rail.

d. Stainless steel guide brackets shall be attached to the pump for positioning of the unit on the guide rail during installation or removal of the unit within the basin.

5. Level Control.

a. Level control shall be by means of mercury float switches, single action design, capable of withstanding water penetration under 25 feet of water with at least a 3 to 1 safety factor. Float switches shall be mounted

firmly in place in such a way that prevents tangling or fouling in the basin.

b. Two float switches shall be used to control level; one for pump turn on, and one for pump turn off. A third switch shall be provided for high water alarm.

6. Junction Box.

a. NEMA 4X watertight junction box shall be installed in the basin for connection of the pump and control wiring. The box shall be constructed of self-extinguishing ABS plastic with minimum wall thickness of 3/16 inch. The box cover shall be bolted on with stainless steel fasteners and sealed with a neoprene gasket. Individual corrosion-resistant and liquid tight cable connectors constructed of thermoplastic with neoprene bushing and sealing ring shall be provided. The box and all connections shall be completely watertight and shall be capable of withstanding an external liquid pressure of 10 PSI. The junction box and fittings shall be of waterproof design. All fittings and hardware shall be of non-corrosive construction.

b. Conduit and wiring between basin and control panel shall be installed in accordance with National Electric Codes and all electrical codes.

c. The junction box shall be mounted within easy reach from ground level and must open in such a manner that all connections within can be viewed from the surface without leaning into the basin.

C. Valves, Fittings and Piping.

1. Valves, fittings, and piping shall conform with Figures 1 and 2 and meet or exceed properties provided herein:

a. Influent connection shall be a four (4) inch cast iron or thermoplastic caulking hub shipped loose for field mounting by the installer. The hub shall be designed to be installed without personnel having to enter the basin. The hub shall be beveled approximately 3 ° to accommodate the gravity pipe. The influent hub shall have a textured surface in order to provide better caulking adhesion.

b. The discharge piping shall consist of 1¼-inch schedule 40 stainless steel pipe or SCH 80 PVC. A ball check valve shall be installed between the pump discharge and the movable fitting.

c. The design of the check valve shall be such that the ball shall not impede flow through the valve. The operating flow area shall be equal to the nominal size of the valve. The ball shall clear the waterway providing “full flow” equal to the diameter of the pump discharge piping. It shall be non-clog in design. The ball shall be resistant to material normally found in sewage. The body and access plug shall be gray cast iron, ASTM Class 30, or better.

d. The movable fitting shall be positive seal, slide design having a working pressure rating of no less than 150 PSI. The movable fitting, when in position shall be held against the stationary fitting by the construction of the stainless steel rail, aligning the movable fitting for proper sealing of the two surfaces under pressure. A stainless steel lifting cable with a minimum breaking strength of 2100 pounds shall be provided for pump installation and removal.

e. A 1¼-inch bronze gate valve shall be installed in the discharge piping to provide shut-off capabilities during pump removal, and shall be fitted with an integral stainless steel extension handle. The extension handle shall extend up to within six (6) inches of the top of the basin and shall be secured at the top of the basin with a stainless steel bracket.

f. A flushing connection shall be provided in the discharge line past the check and isolation valves. The connection shall include a 1¼-inch bronze gate valve, 1¼-inch stainless steel pipe, and a 1¼-inch female "Ever-Tite" quick disconnect coupling. The connection point shall be 6-inches below the top of the basin. The flushing valve shall be furnished with a handle of identical construction to that furnished for the isolation valve.

D. Grinder Pump Station Basin.

1. The basin shall be constructed of fiberglass-reinforced polyester with molded top flange and bottom. The basin shall be free of imperfections, sound, watertight and of high quality workmanship. The polyester laminates shall provide a balance of mechanical, chemical, and electrical properties to insure a long life. They must be impervious to microorganisms, mildew, mold, and fungus, and non-corrosive inside and outside when installed in soils deleterious to metal or concrete structures.

2. The basin shall have a minimum diameter of 36" and have other dimensions as shown in the Detail Drawings.

3. Basin wall thickness shall be suitable to withstand wall collapse under a hydrostatic pressure of 120 pounds per cubic foot. Basin walls and bottom must be capable of withstanding at least two times the actual imposed loading at basin depth.

4. An anti-flotation collar or bottom plate shall be furnished on the basin. The bottom plate shall be at least six (6) inches larger in diameter than the basin bottom. The bottom shall be an integral part of, and permanently bonded to, the basin.

5. The fiberglass basin shall be equipped with a steel cover coated with a high temperature baked epoxy green-colored paint. Covers shall be securely held in place by a minimum of six (6) stainless steel bolts threaded into stainless steel inserts in the top collar of the basin. The basin cover shall be provided with a

padlock of the solid rustless design with a hardened steel shackle and zinc coating. The padlock shall be keyed to the AUTHORITY system.

6. Each basin shall be furnished with a 2-inch PVC rainproof vent, with the opening covered with a corrosion resistant screen. The vent shall be installed in the basin cover and terminate in a down turned position.

E. Controls.

1. Control Components.

a. The control components for operation and protection of the grinder pump station shall consist of the following:

1) Control transformer for supplying 24 V.A.C. power for all control apparatus plus an adequate amount of additional power for external alarm devices. The transformer shall have secondary protection accessible without opening inner swing panel.

2) A power disconnect with an operator handle extending through the inner swing panel without exposing live parts inside the control enclosure.

3) Short circuit, lightning, overload, and motor running overload protection, which meet the National Electric Code standards.

4) Locked rotor protection for de-energizing the pump motor to protect the run windings of all motors and start windings of single phase motors. The circuitry shall contain a manual reset and shall not be subject to nuisance trips even during periods of power failure.

5) Motor start and under voltage release by means of an open frame, across the line magnetic motor contactor with contacts made of silver cadmium oxide.

6) A “Manual-Off-Automatic” selector switch shall be provided within the control panel for operating the pump manually when in “Manual”, pump disable when in “Off”, and normal operation when in “Automatic” position. The selector switch shall not disable the alarms under any condition.

7) Pump run light to indicate the pump motor has been energized.

8) Mercury Float switch mounted in the basin which energizes the high water light, alarm light, and alarm

9) Solid-state moisture sensing device to detect moisture signal from pump, which energizes seal failure light and alarm light.

10) A 24 volt A.C. 25 watt flashing alarm light with a red globe shall be included and mounted in a manner to prevent rain water from standing or collecting in any gasketed area of the fixture.

11) A 24 volt A.C. alarm horn with a rainproof conduit box and mounting fixture shall be included which is rated at a minimum of 106 DB at one (1) foot. A panel-mounted switch shall permit silencing of an external alarm device as well as a test mode to assure the alarm device is operable.

12) Overload reset device operable without opening the inner swing panel.

b. The control assembly shall be completely factory wired except for power feed lines, motor connections, and mercury float switches. Wiring shall be done in accordance with all applicable standards set forth by the National Electric Code and shall be color coded and numbered as indicated on factory wiring diagrams.

c. All components shall be electrically grounded to a common ground screw mounted on the removable back panel. Upon installation of the control assembly, and before connection of any power feed lines, installer shall extend a grounding wire from the control panel main ground screw to external ground in accordance with NEC and local electrical codes.

2. Control Enclosure.

a. The pump control enclosure shall be of fiberglass or stainless steel construction designed for corrosion resistance in compliance with NEMA 4X standards. The enclosure shall have a full inner swing panel mounted on a continuous piano type hinge. The inner swing panel shall be fabricated from steel having a minimum thickness of 0.06 inches (16 gauge). The inner swing panel shall have provisions for mounting all basic controls and instruments. It shall have a minimum horizontal swing of 90° and shall be held in closed position by quarter-turn door latches. The outer door shall have a minimum horizontal swing of 180° and shall be held in a closed position by a padlock keyed to the AUTHORITY system. The outer door shall be mounted on a stainless steel continuous hinge and have a seal around its entire perimeter.

b. The enclosure shall have a removable back panel of a minimum thickness of 0.078 inches (14 gauge), secured to the enclosure on collar studs or weld nuts. The back panel shall be pre-drilled and tapped to accept mounting of control components. Self-tapping screws shall not be used to mount any component.

c. The enclosure shall be mounted at a position where it is visible from the sewage grinder pump station.

2.02 PRESSURE PIPE (FORCE MAIN)

Refer to Section 02725-Piped Utilities-Force Mains And Pressure Sewers

PART 3 EXECUTION

3.1 INSTALLATION

A. Grinder Pump Station

1. The DEVELOPER shall submit the following to the Authority for approval:

   a. Site plan showing location of grinder pump station, routing of all piping, and electrical wiring.
   b. Manufacturer's catalog data to demonstrate compliance with specifications and figures.
   c. Installation details.

2. The grinder pump station shall be installed at a location to be determined by the property owner or developer. The AUTHORITY shall approve the proposed location.

3. The depth of the grinder pump station will be dependent upon the location and depth of the existing house service. The influent to the basin shall be set so that a minimum grade of two (2) percent for the new gravity service line can be maintained. The minimum total unit depth from the invert of the sump to the top of the entry hatch shall be no less than six (6) feet and no greater than twelve (12) feet. The top of the station shall be 6-inches above final grade.

4. All grinder pump stations shall be installed on a bed consisting of A.A.S.H.T.O. No. 8 or No. 57 Coarse Aggregate and shall have a concrete anti-flotation collar poured around the bottom. The basin shall be set on a concrete pad with the anti-flotation collar secured to the concrete with bolts or steel clips; or, the concrete shall be poured around the perimeter of the basin above the anti-flotation collar. In either case, the DEVELOPER'S CONTRACTOR shall submit calculations justifying the method chosen and the volume of concrete to be used.

5. The remaining excavated area shall be backfilled to six (6) inches below grade with excavated material containing no soil lumps, stones, concrete, or foreign objects larger than one (1) inch in maximum dimension. Six (6) inches of topsoil with seed and supplements shall be placed to grade the surrounding area.

6. If the excavated material does not meet the requirements described above, a backfill material consisting of A.A.S.H.T.O. No. 8 or No. 57 Coarse Aggregate shall be used to a point six (6) inches below the finished grade.

7. The DEVELOPER shall schedule an inspection by the AUTHORITY before beginning work, before backfilling equipment and piping, and at completion of work. The installation shall be approved by the AUTHORITY. The DEVELOPER shall be responsible for complete and approved installation.

8. Pressure sewer shall be hydrostatically tested by the installer to the satisfaction of the ENGINEER in accordance with the procedures and requirements established in the sewer manual.

9. Padlocks keyed to the AUTHORITY system shall be furnished for the grinder pump station lid and pump control enclosure. One key shall be provided to the homeowner and one key shall be provided to the AUTHORITY.

10. Electrical system shall meet all of the latest requirements of the National Electric Code and the Public Utility furnishing power to the system. Nothing contained in this manual shall be construed to conflict with these requirements and should a conflict occur, these requirements shall apply.

B. Pressure Pipe

Refer to Section 02725-Piped Utilities-Force Mains And Pressure Sewers

END OF SECTION 11400

Table 4

Submersible Grinder Pump Check List

Job Number	
Developer	
Development	
Date	
Submittal Number	

Developer/contractor is to initial and submit this checklist as part of the grinder pump submittal. Submittals that do not include the check list or items not submitted will be returned as incomplete.

		Authority Use	
	Applicants Initials	Acceptable	Unacceptable
1. Name and Address of developer.			
2. Project location.			
3. Site plan and elevation drawings showing building(s) location and elevation of gravity sewers, elevations of the top and bottom of the grinder pump station(s) and location and elevations of the pressure sewer(s).			
4. Submit friction calculations at various flows to produce system curve. Plot (and submit) system curve versus pump performance curve.			
5. Calculations justifying pump horsepower and impeller diameter selection			
6. Submitted grinder pump meets Authority specifications.			
7. Submitted grinder pump station basin meets Authority specifications.			
8. Submitted control components meet Authority Specifications.			

NOTES:

1. BOLTING OF MANHOLE FRAME AND COVER NOT REQUIRED FOR MANHOLES INSTALLED IN PAVED SURFACES.
2. ALL STONE GRADATIONS ARE AASHTO CLASSIFICATION.
3. PIPES SHALL PROTRUDE 2" INSIDE MANHOLE WALL.
4. REFERENCE SPECIFICATION SECTION 02605 FOR ANTI-FLOATATION REQUIREMENTS.
5. MANHOLE FRAMES SHALL BE SET WITH PREFORMED PLASTIC GASKET (RUB-R-NEK) PRIOR TO RESTORATION TO PREVENT FILTRATION.

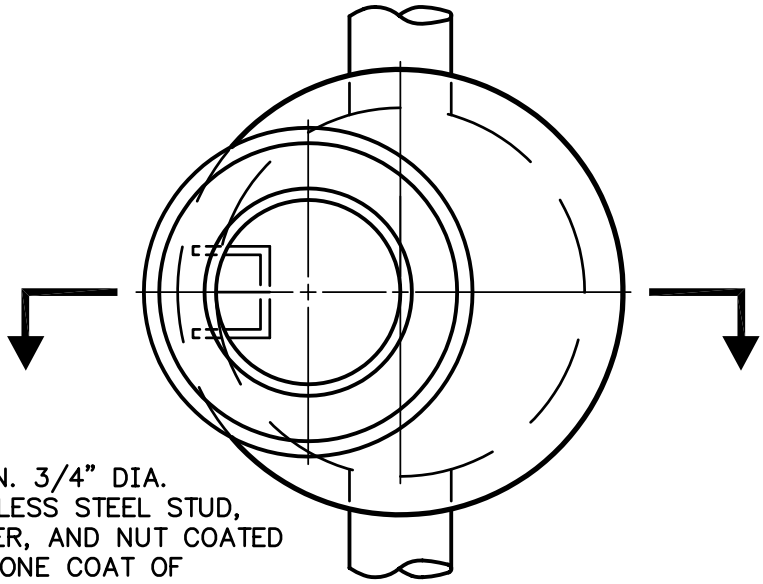

PLAN

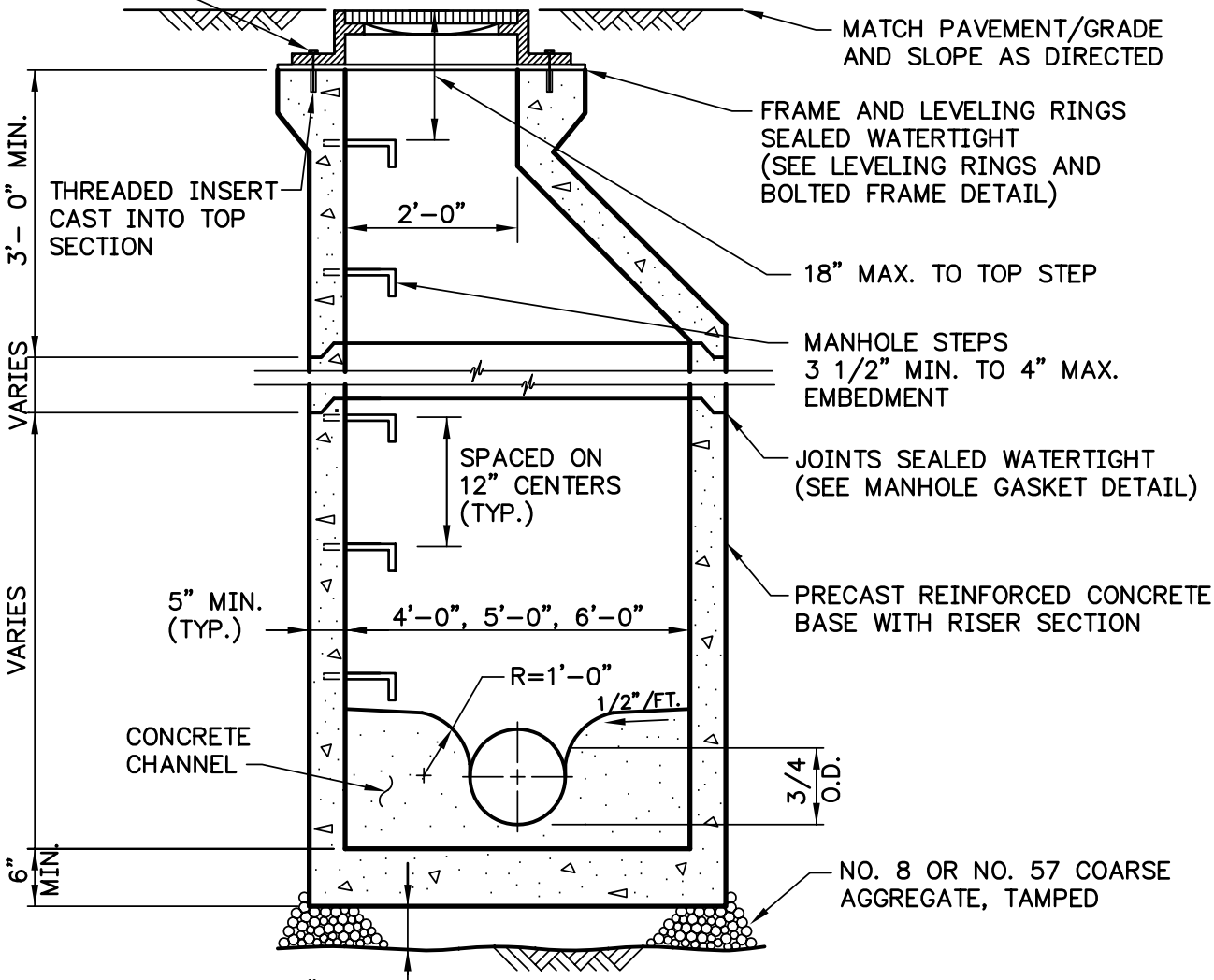

SECTION

PRECAST CONCRETE MANHOLE WITH PRECAST CONCRETE BASE

DATE	REVISIONS

SCALE	FILE
NO SCALE	SSPRECASTMH

NOTES:

1. BOLTING OF MANHOLE FRAME AND COVER NOT REQUIRED FOR MANHOLES INSTALLED IN PAVED SURFACES.
2. ALL STONE GRADATIONS ARE AASHTO CLASSIFICATION.
3. PIPES SHALL PROTRUDE 2" INSIDE MANHOLE WALL.
4. REFERENCE SPECIFICATION SECTION 02605 FOR ANTI-FLOATATION REQUIREMENTS.
5. MANHOLE FRAMES SHALL BE SET WITH PREFORMED PLASTIC GASKET (RUB-R-NEK) PRIOR TO RESTORATION TO PREVENT FILTRATION.

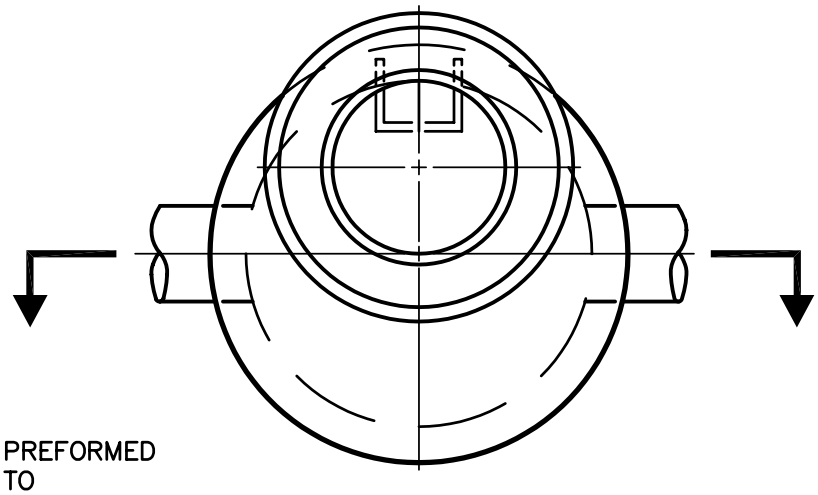

PLAN

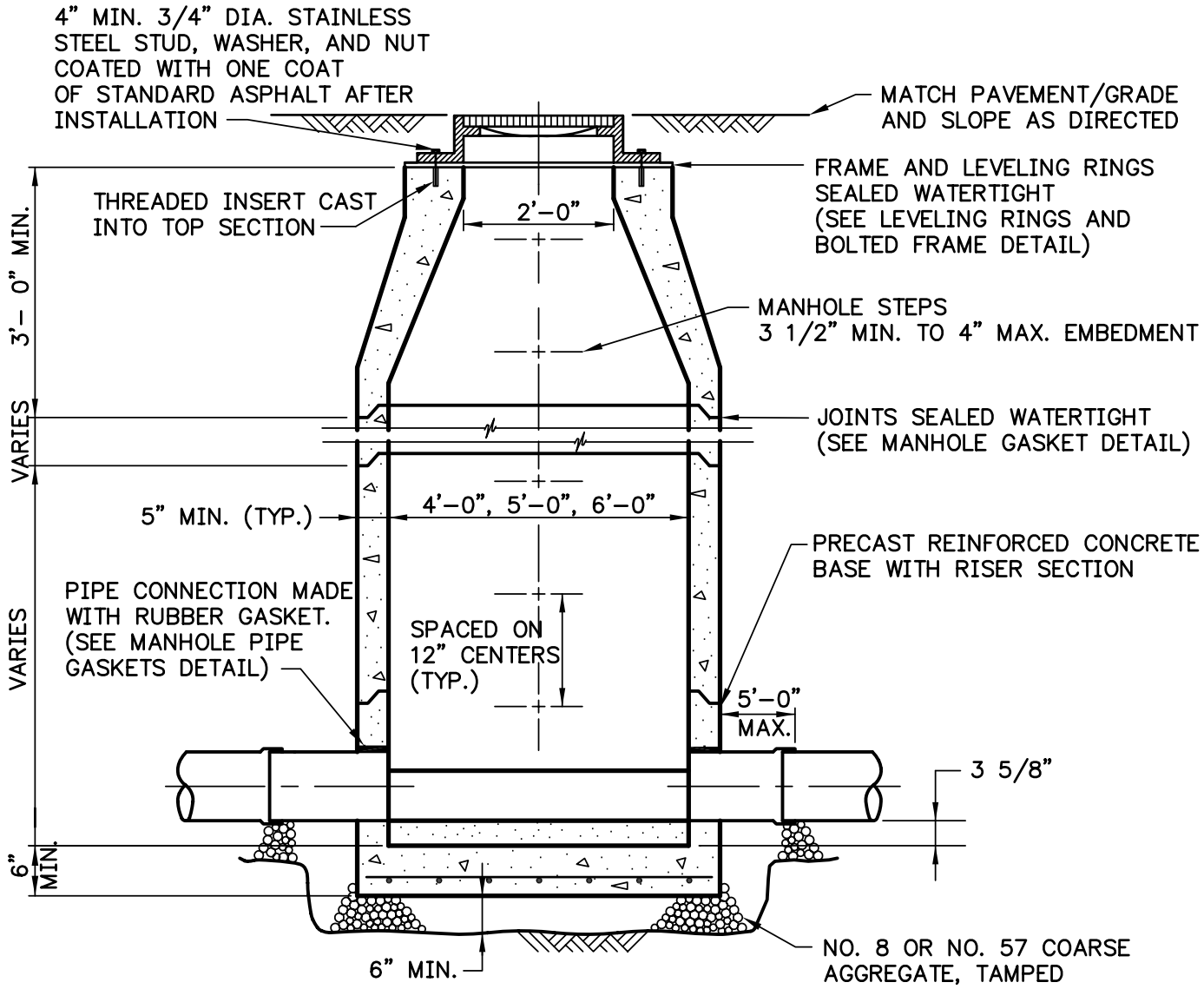

SECTION

PRECAST CONCRETE MANHOLE WITH PRECAST CONCRETE BASE

DATE	REVISIONS

SCALE	FILE
NO SCALE	SSPRECASTMH2

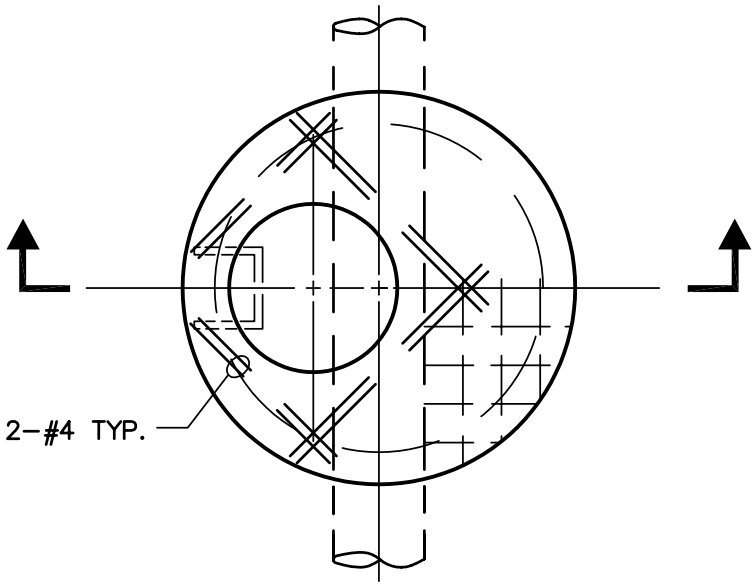

PLAN

NOTES:

1. USE FLAT SLAB TOPS ON MANHOLES FOR CONNECTING SEWER LINES HAVING LESS THAN 5'-0" DEPTH OF COVER OVER SHALLOWEST PIPE.
2. 4 THREADED INSERTS REQUIRED.
3. REFERENCE SPECIFICATION SECTION 02605 FOR ANTI-FLOATATION REQUIREMENTS.
4. MANHOLE FRAMES SHALL BE SET WITH PREFORMED PLASTIC GASKET (RUB-R-NEK) PRIOR TO RESTORATION TO PREVENT FILTRATION.

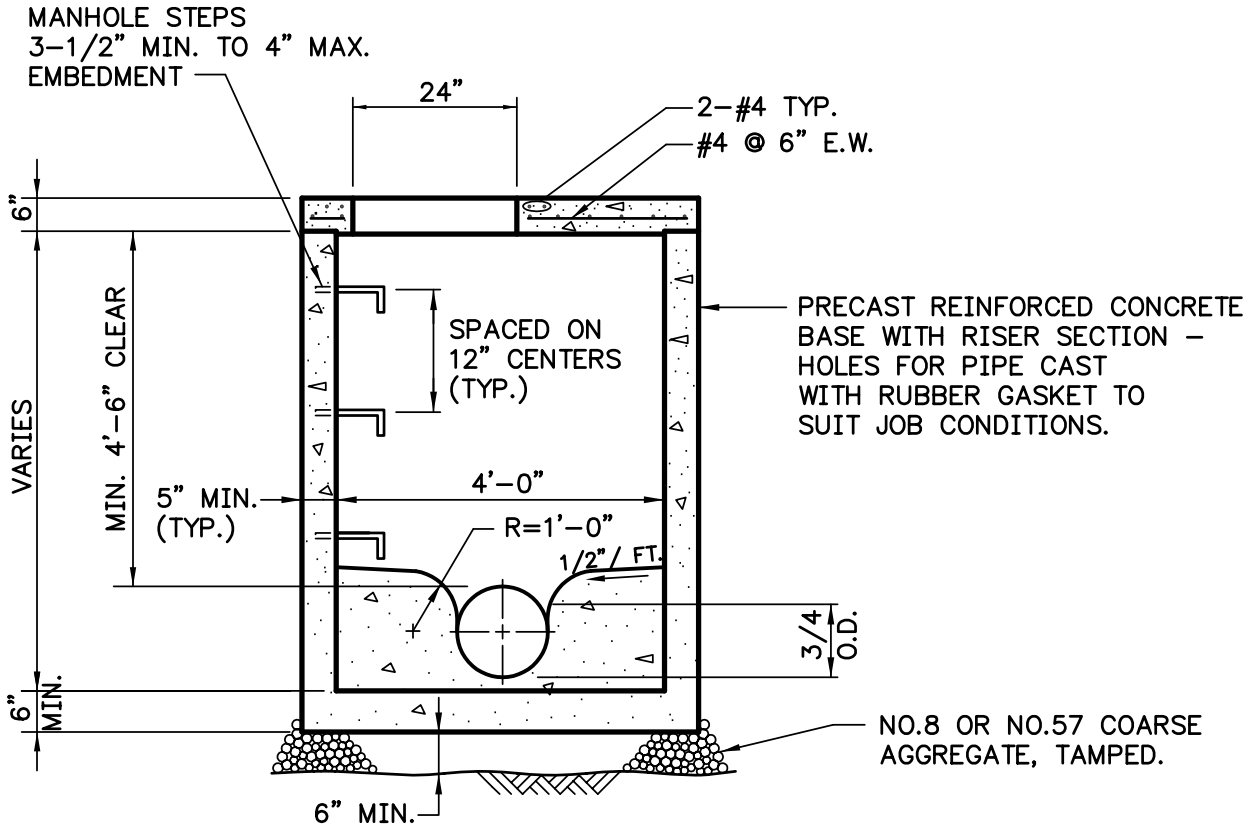

SECTION

PRECAST CONCRETE SHALLOW MANHOLE WITH PRECAST CONCRETE BASE

DATE	REVISIONS

SCALE	FILE
NO SCALE	PRECASTCONCMH3

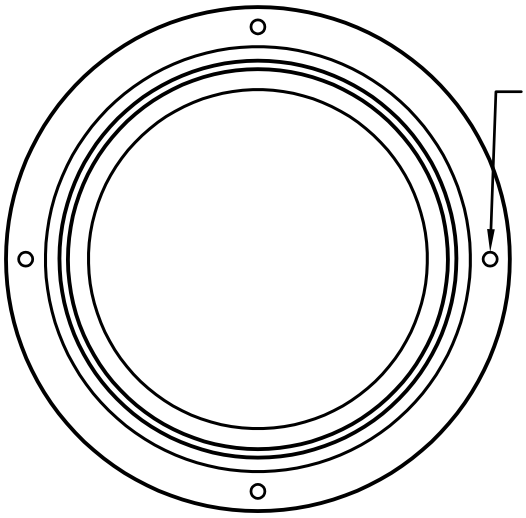

PLAN

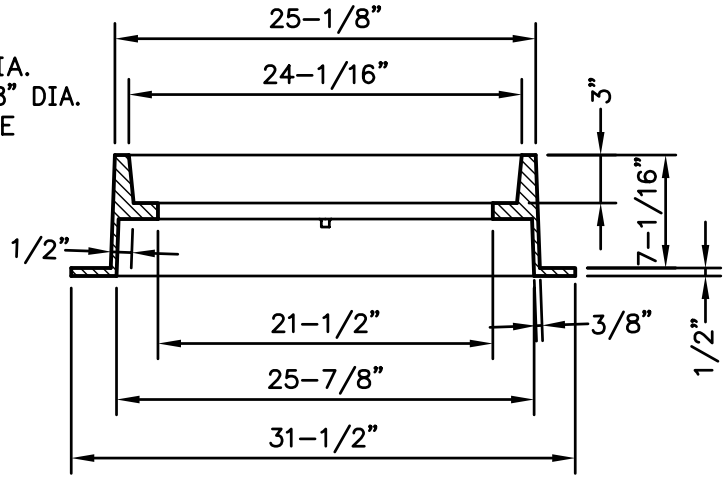

SECTION

MANHOLE FRAME DETAIL

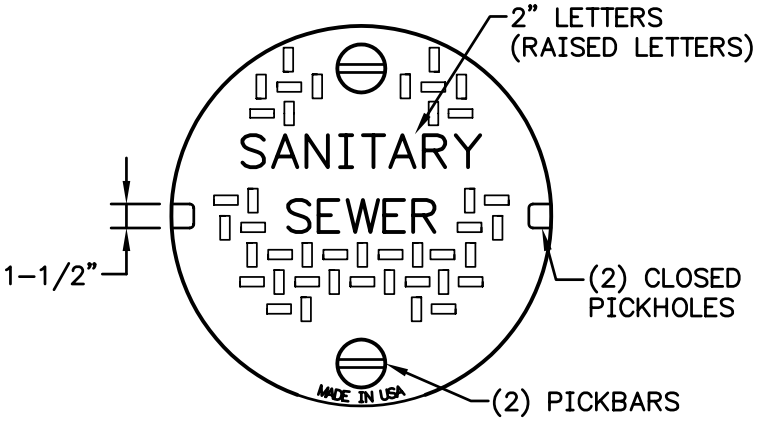

PLAN

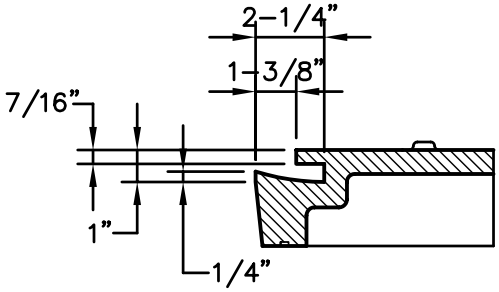

PICKHOLE DETAIL

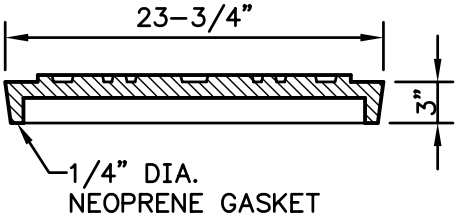

SECTION

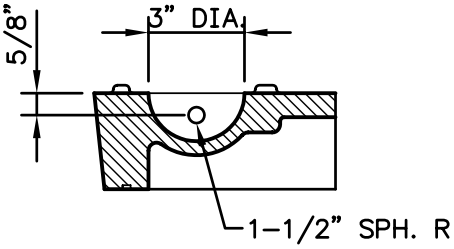

PICKBAR DETAIL

HEAVY DUTY WATER TIGHT MANHOLE FRAME AND COVER

DATE	REVISIONS

SCALE	FILE
NO SCALE	MANHOLECOVER

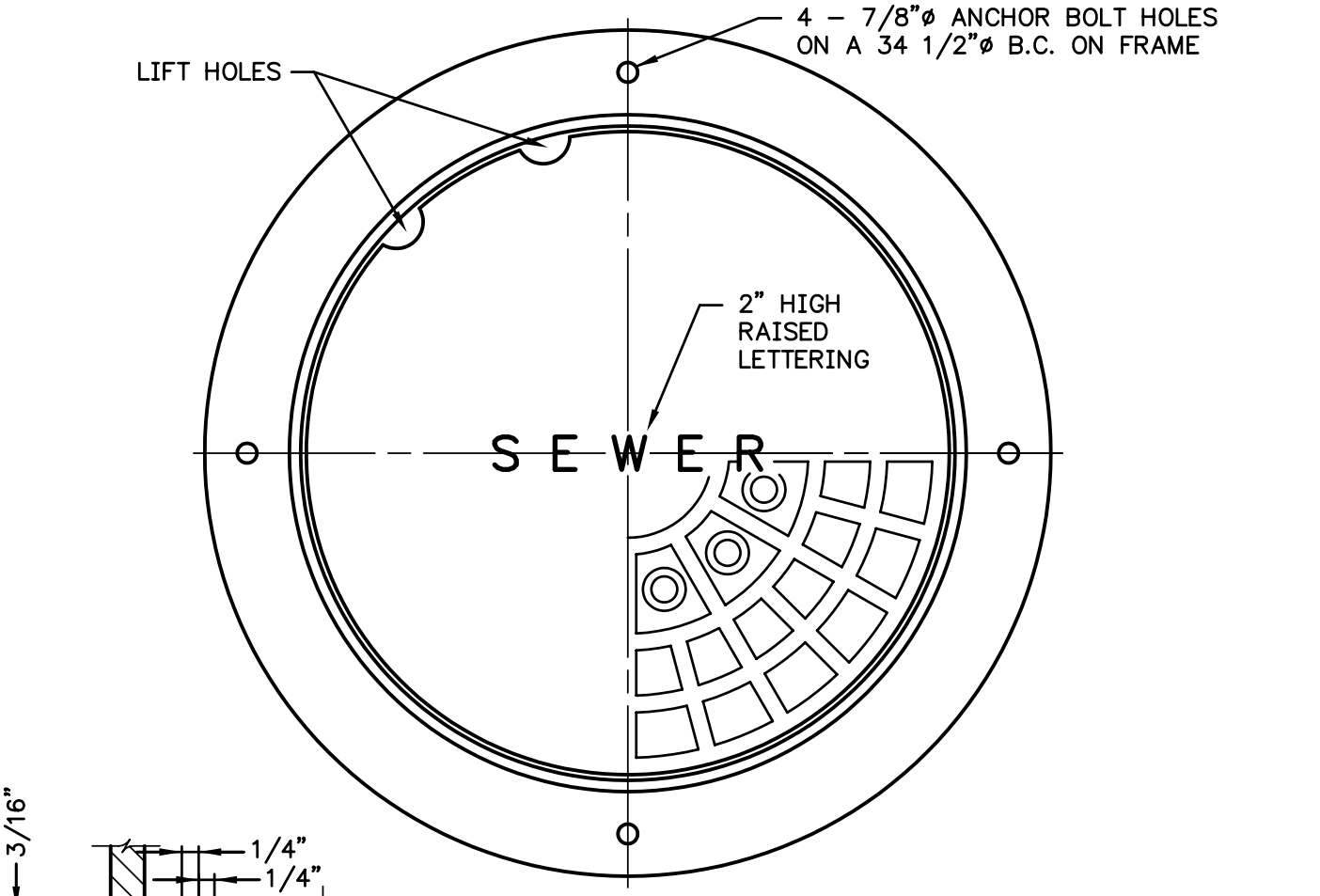

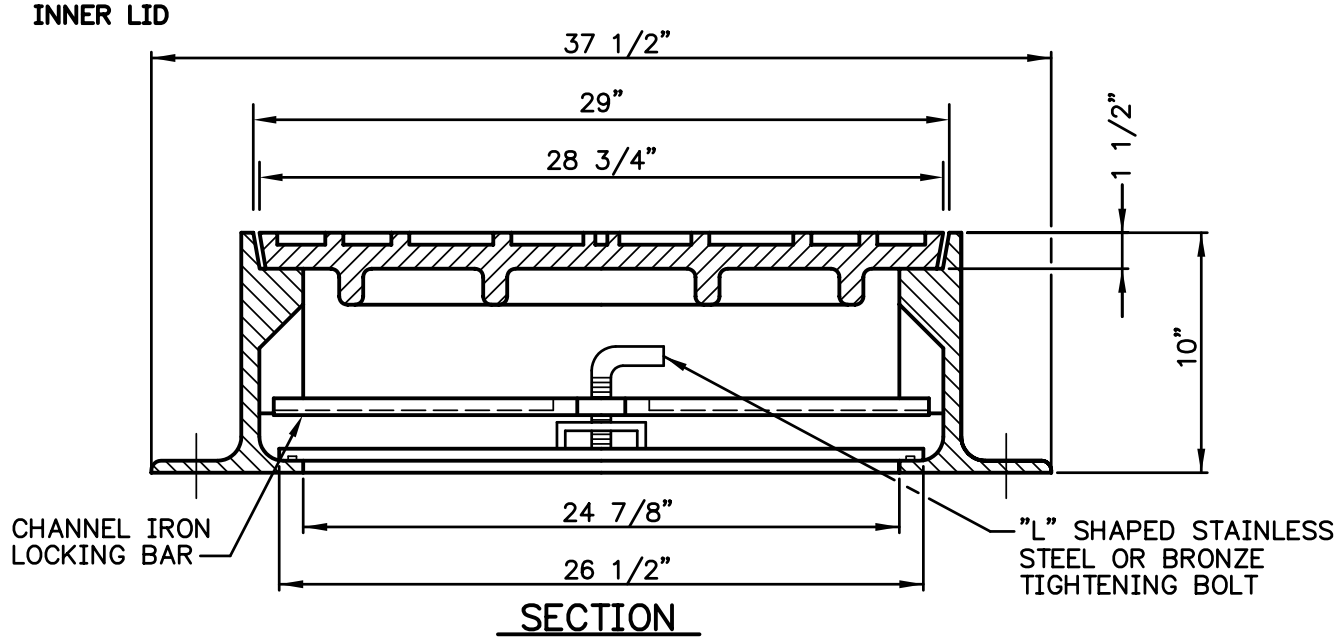

CAST IRON WATERTIGHT MANHOLE FRAME AND COVER

DATE	REVISIONS

SCALE	FILE
NO SCALE	CIWTMANHOLE

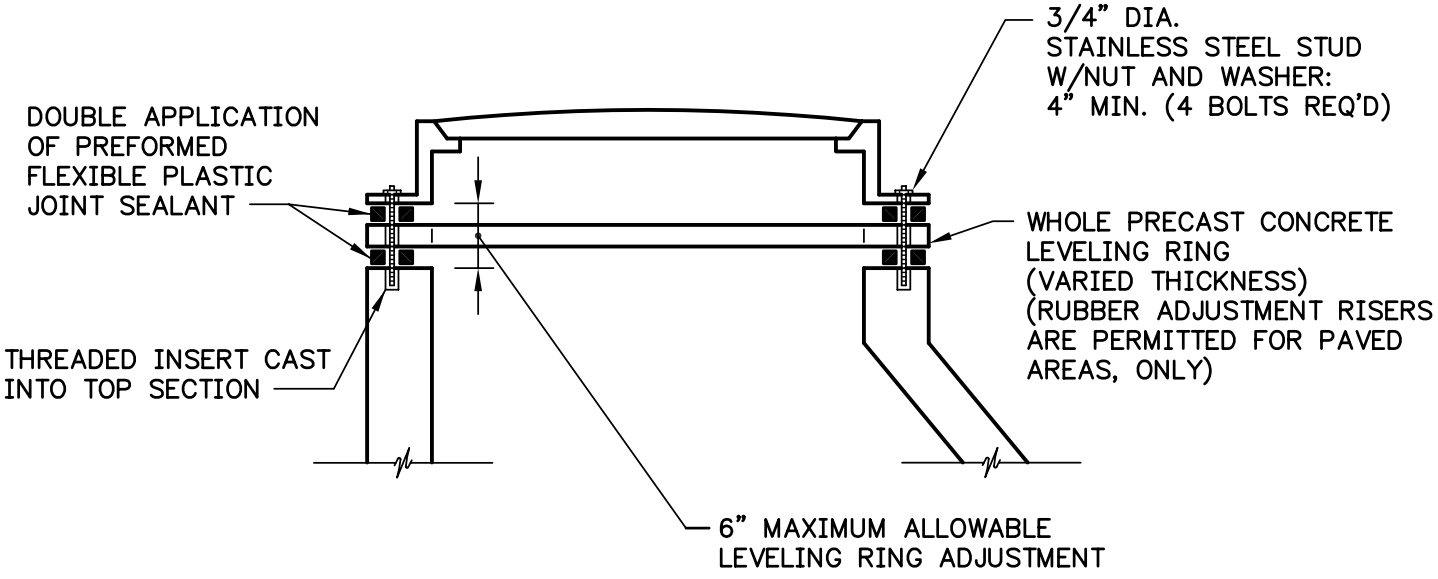

SECTION

NOTE: ALL NON-SHRINK, NON-METALLIC GROUT SHALL BE TROWELED SMOOTH.

LEVELING RINGS AND BOLTED FRAME DETAILS

DATE	REVISIONS

SCALE	FILE
NO SCALE	SSBOLTEDFRAME

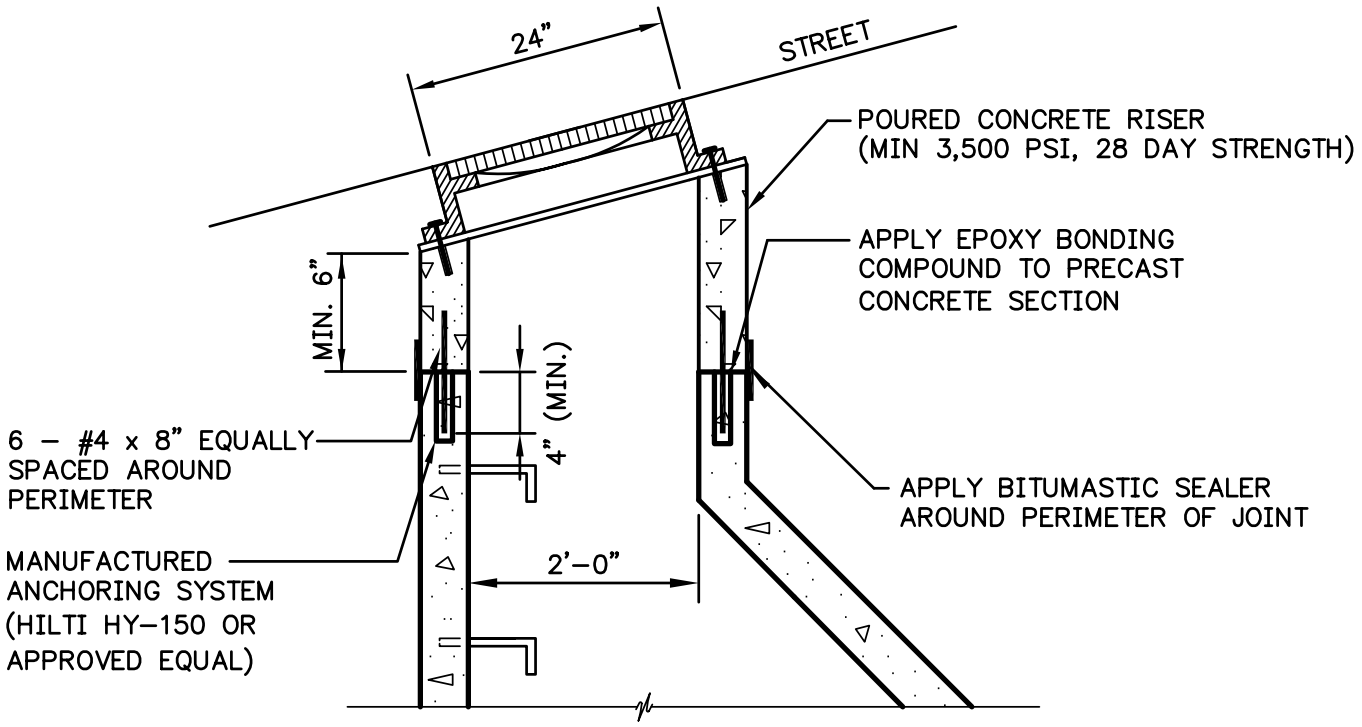

SECTION

NOTE: TO BE USED ONLY AFTER CONSULTATION WITH AUTHORITY OR IT'S ENGINEER.

POURED CONCRETE RISER FOR STREET GRADES OF 4% OR GREATER

DATE	REVISIONS
12/5/01	Structural

SCALE	FILE
NO SCALE	CONRISER2

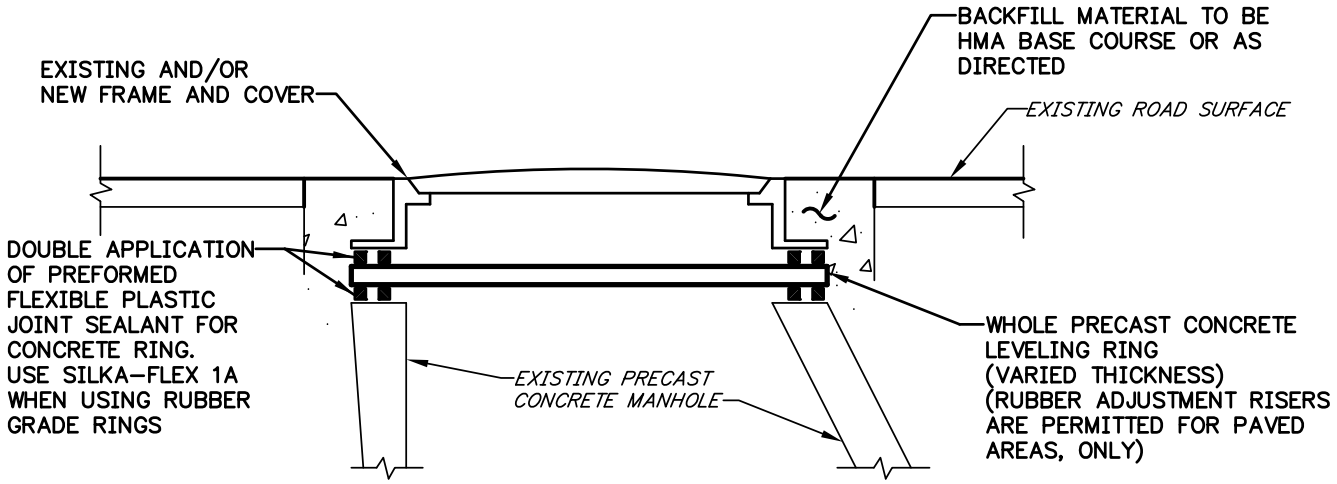

SECTION

NOTES:

1. ALL CONCRETE GRADE RINGS WILL BE ONE(1) PIECE. SPLIT GRADE RINGS ARE NOT ALLOWED.
2. RUBBER GRADE RINGS WILL BE AS MANUFACTURED BY GNR TECHNOLOGIES, INC. OR APPROVED EQUAL.
3. FINAL RIM ELEVATION WILL BE COORDINATED WITH THE PENNDOT CONTRACTOR.
4. IF WITHIN PENNDOT LEGAL RIGHT-OF-WAY ALL MATERIAL MUST BE APPROVED BY PENNDOT.

FILE NAME: MH-EX-ADJUSTMENT-RING.dwg

STANDARD DETAILS

EXISTING MANHOLE ADJUSTMENT DETAIL (PAVED AREAS)

SUSQUEHANNA TOWNSHIP AUTHORITY

DATE	REVISIONS

SCALE	DWG. NO.
NO SCALE	1

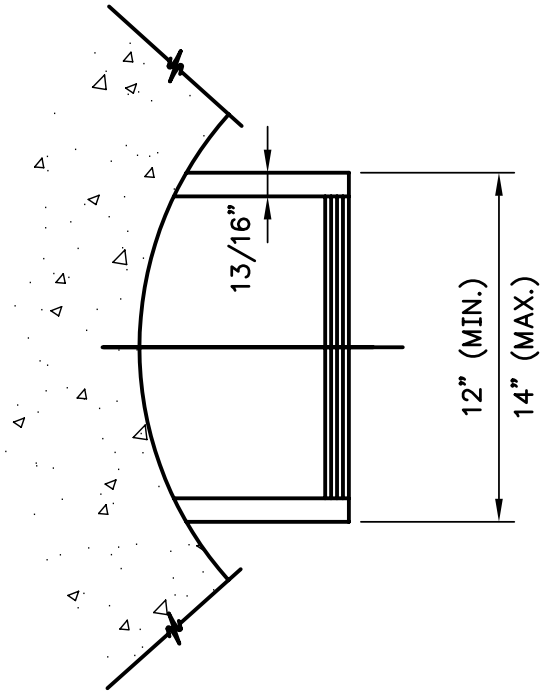

PLAN

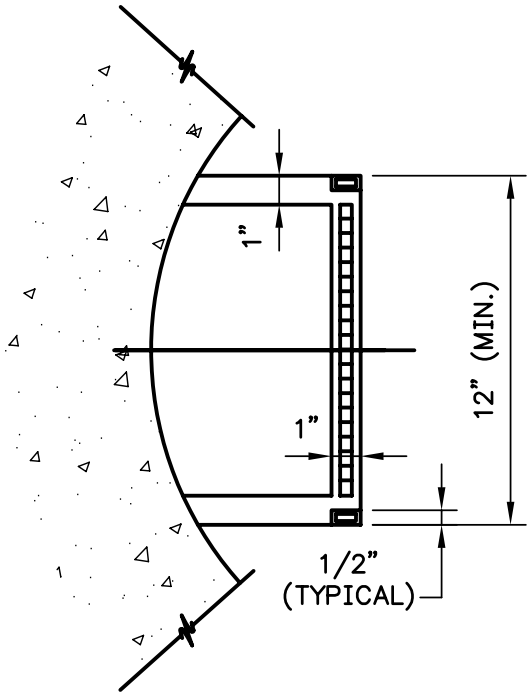

PLAN

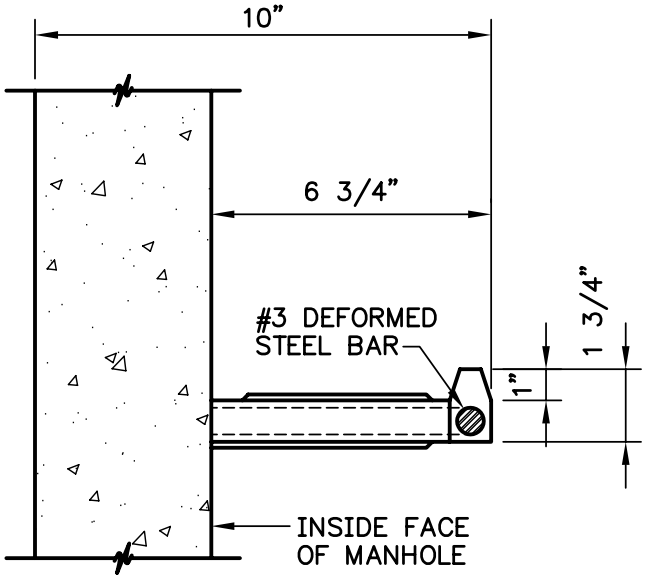

SECTIONAL ELEVATION
REINFORCED PLASTIC

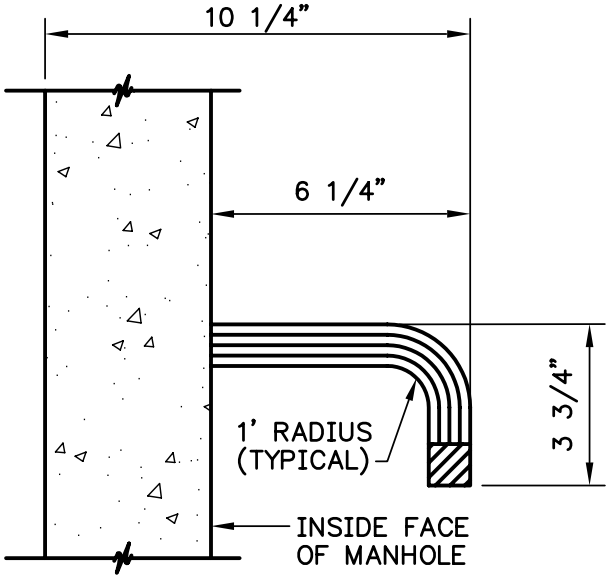

SECTIONAL ELEVATION
ALUMINUM

MANHOLE STEPS

DATE	REVISIONS

SCALE	FILE
NO SCALE	MANHOLESTEPS

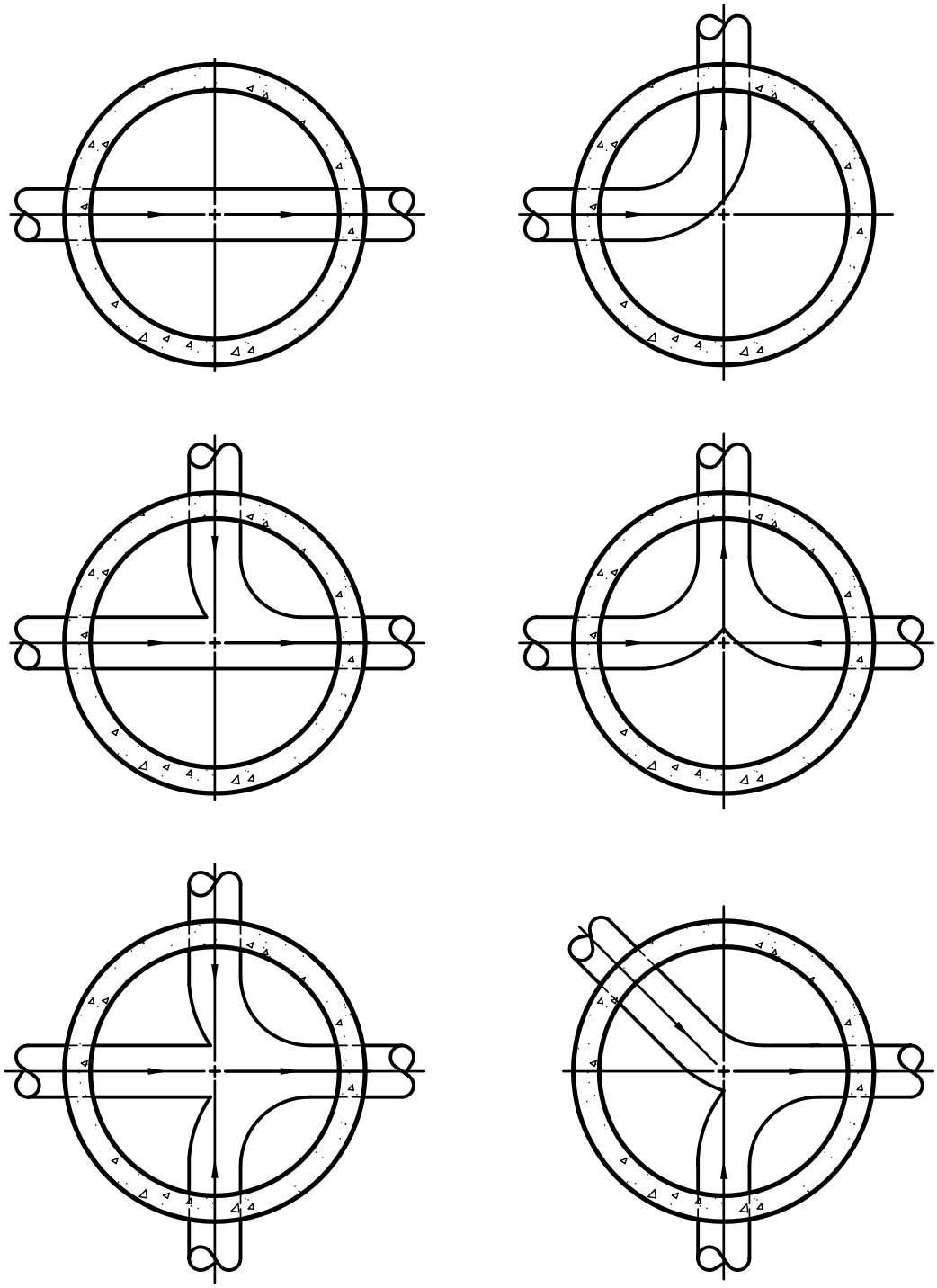

TYPICAL PLAN OF MANHOLE CHANNELS

DATE	REVISIONS

SCALE	FILE
NO SCALE	MHCHANNELS

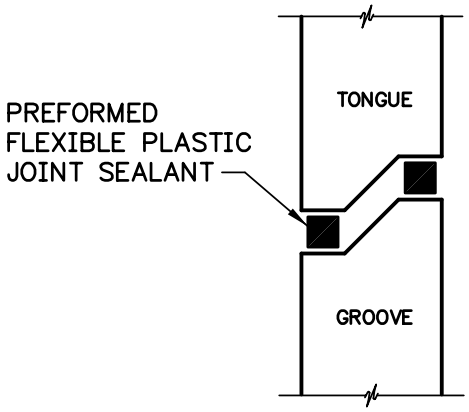

SECTION

MANHOLE GASKET

DATE	REVISIONS

SCALE	FILE
NO SCALE	MHGASKET

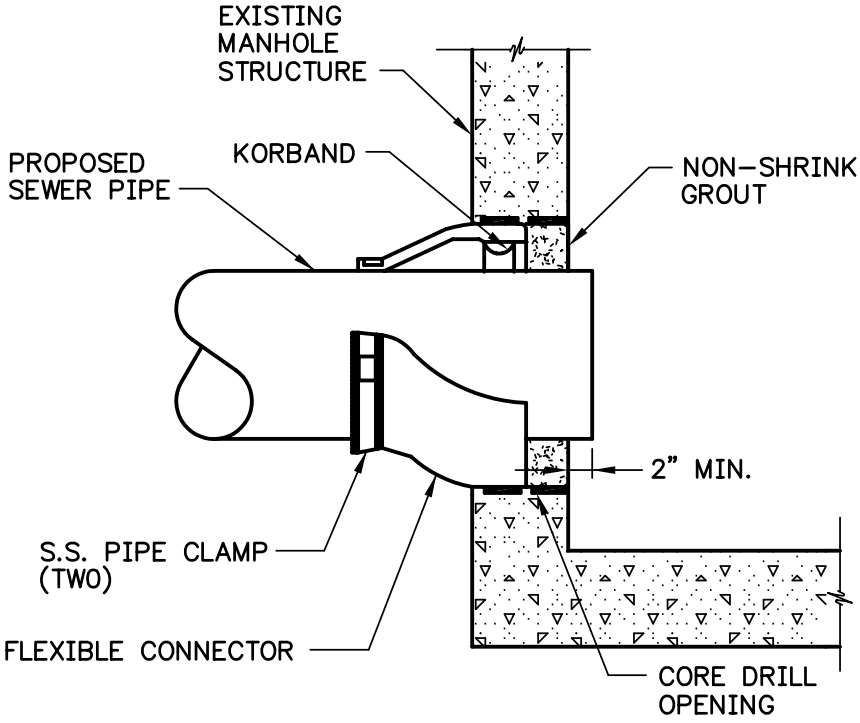

KOR-N-SEAL DETAIL

MANHOLE PIPE ADAPTERS

DATE	REVISIONS

SCALE	FILE
NO SCALE	MHPIPEADAPTERS

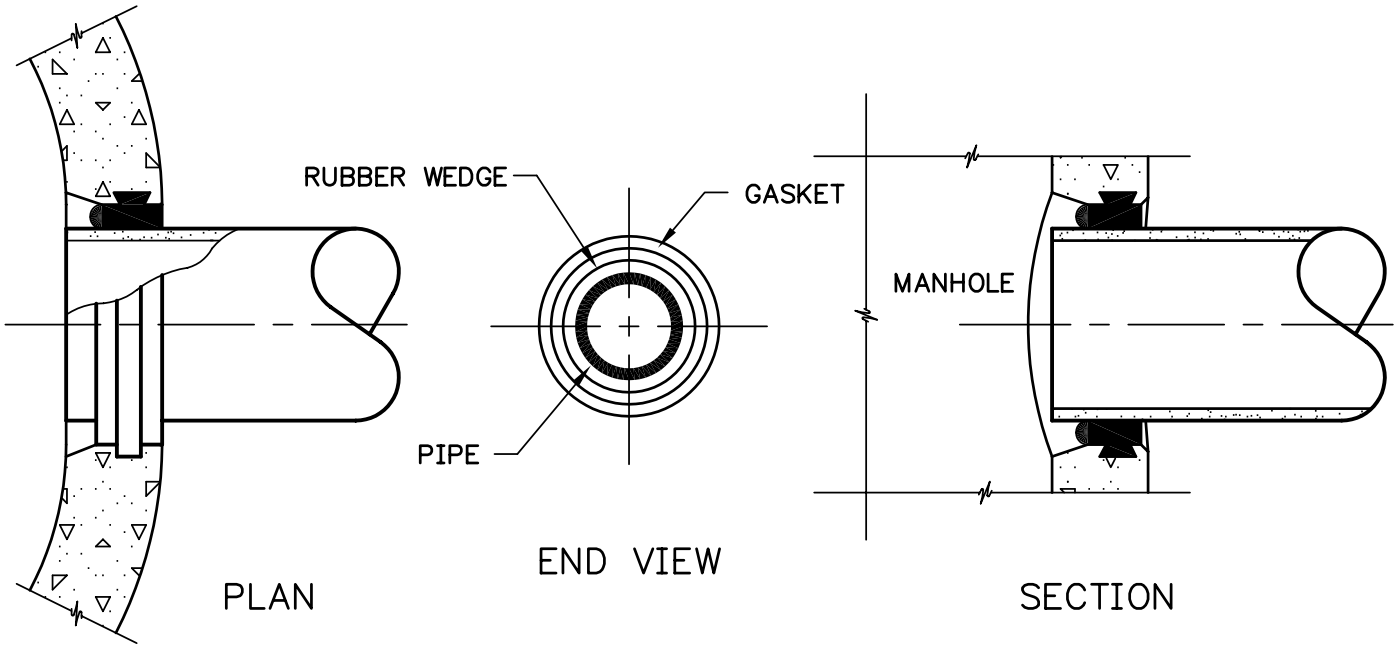

TYPE 1

RUBBER GASKET CAST INTO
PRECAST PIPE OPENINGS

NOTE: AFTER PIPE-TO-MANHOLE INSTALLATION, SEAL ANNULAR SPACE AROUND PIPE, INSIDE AND OUTSIDE OF MANHOLE WITH POLYURETHANE SEALING COMPOUND. (TYP. OF ALL CONNECTIONS).

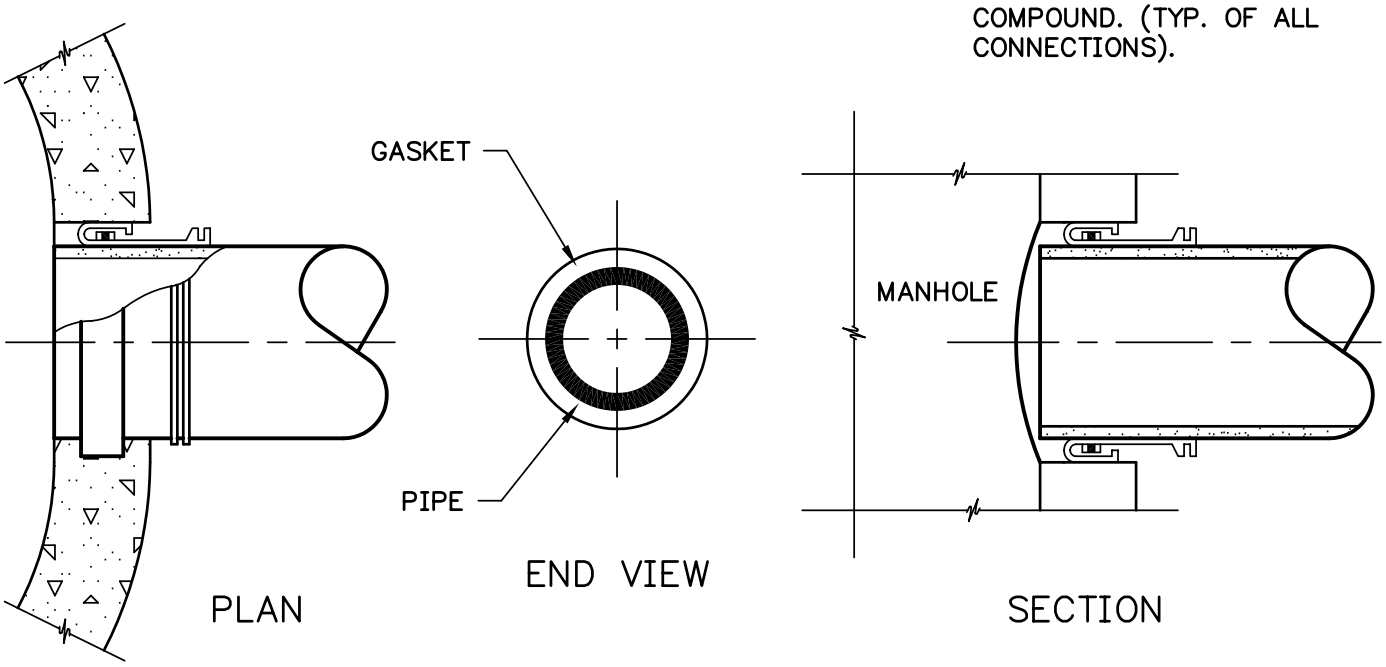

TYPE 2

RUBBER GASKET COMPRESSION RING
INSERT FOR PRECAST PIPE OPENINGS

MANHOLE PIPE GASKETS

DATE	REVISIONS

SCALE	FILE
NO SCALE	MHPIPEGASKETS

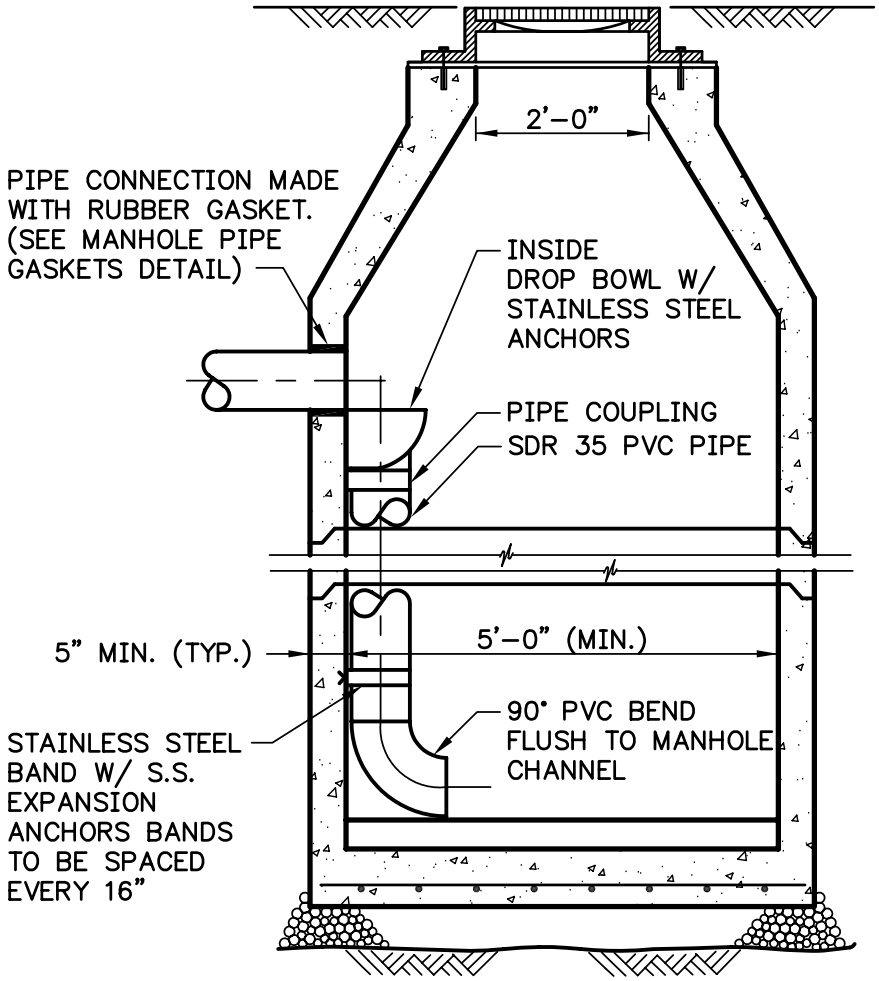

SECTION

INSIDE DROP MANHOLE

DATE	REVISIONS

SCALE	FILE
NO SCALE	INSIDEDROPMH

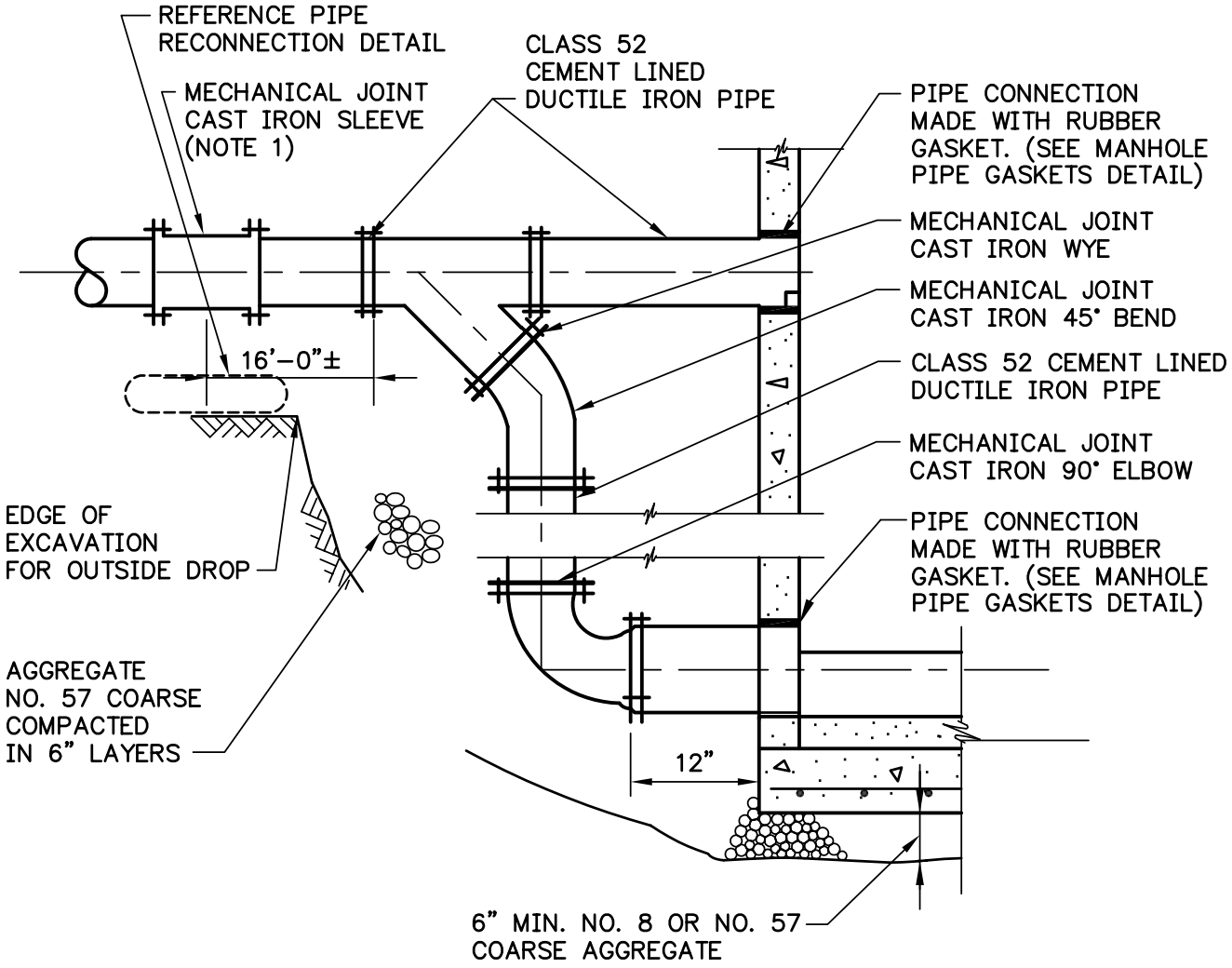

NOTES:

1. WHEN CONNECTING TO SDR 35 PVC PIPE, USE MECHANICAL JOINT COUPLING AND APPROXIMATELY 16'-0" OF PIPE FROM WYE TO CAST IRON SLEEVE. THIS IS TO PREVENT SETTLEMENT AT JOINT. ALSO, MECHANICAL JOINT SHALL HAVE AN SDR 35 PVC GASKET FOR CONNECTION TO THE PVC PIPE.

OUTSIDE DROP CONNECTION DETAIL

DATE	REVISIONS

SCALE	FILE
NO SCALE	DROPCONNECTION

PIPE RECONNECTION DETAIL

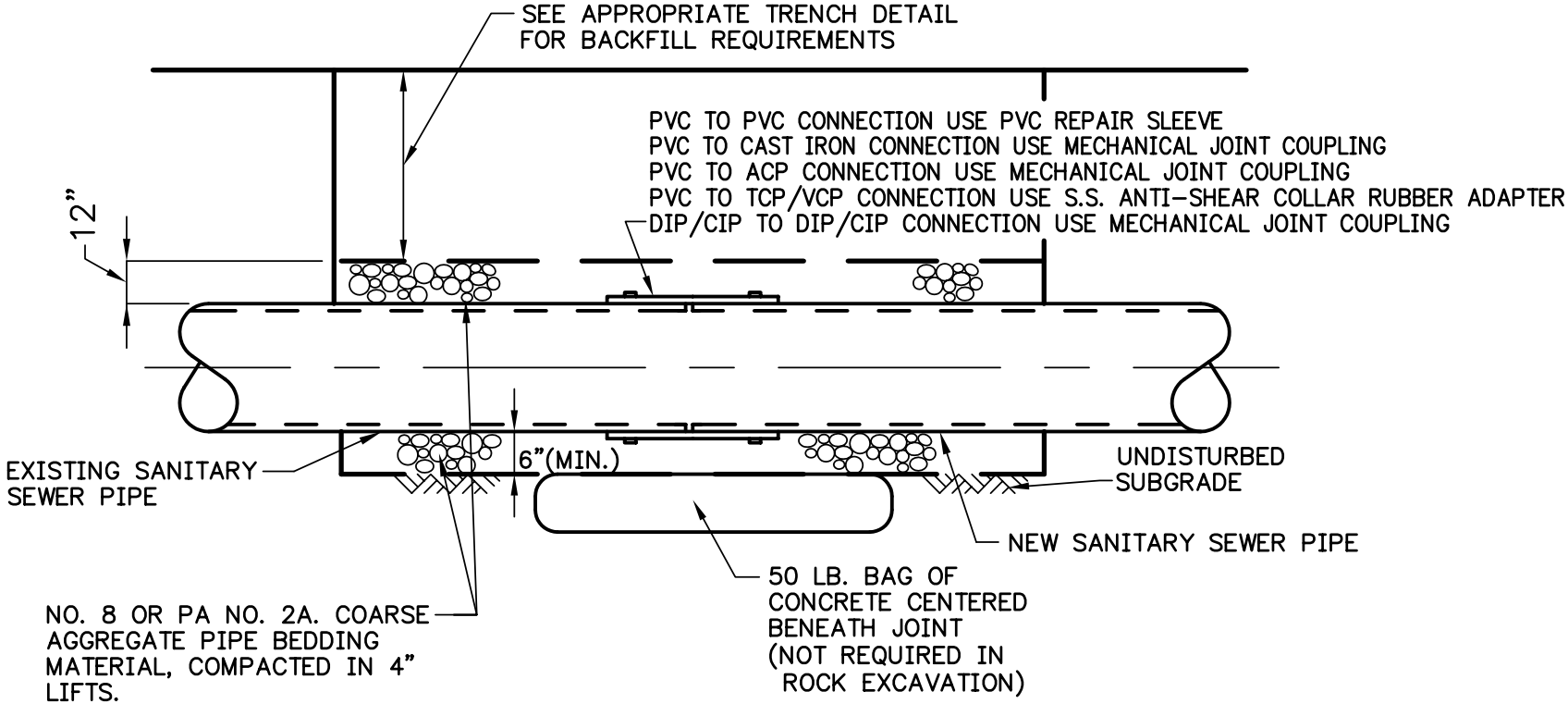

NOTE: RECONNECTIONS TO BE AIR TESTED IN ACCORDANCE WITH SPECIFICATIONS.

MECHANICAL JOINT COUPLINGS TO BE SMITH-BLAIR OR APPROVED EQUAL

SCALE	DATE	REVISIONS
NO SCALE		
FILE PIPERECON		

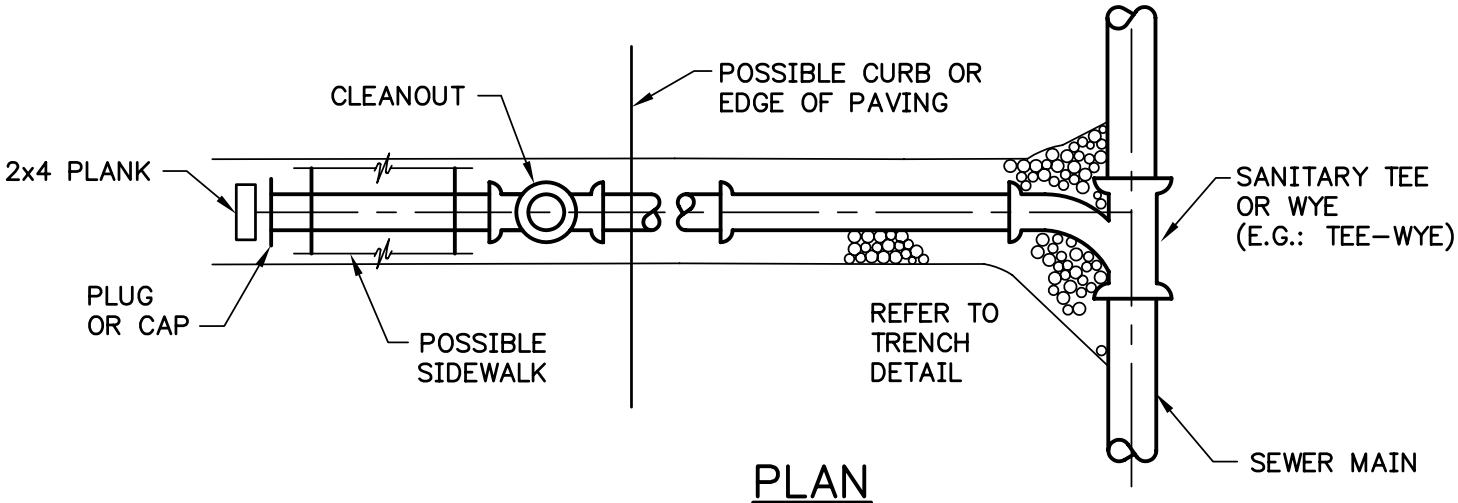

PLAN

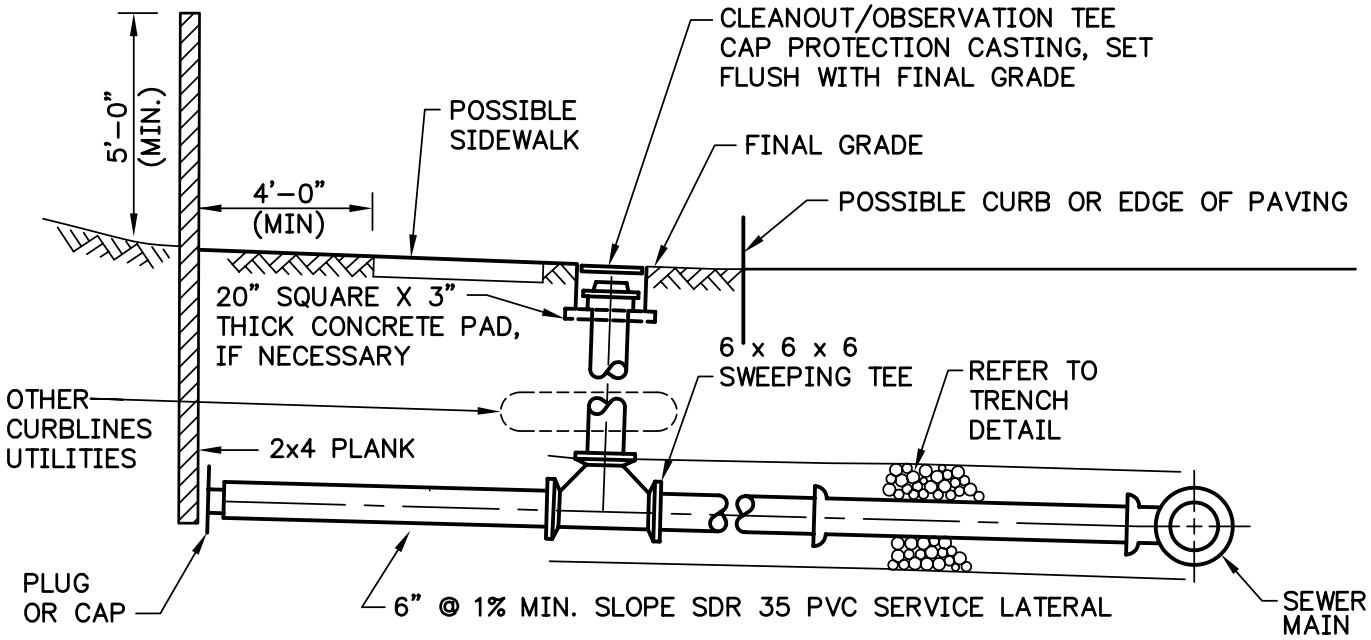

SECTION

NOTES:

1. CURB CLEANOUT NOT TO BE LOCATED IN SIDEWALK OR BENEATH OTHER CURBLINE UTILITIES.

SERVICE LATERAL – NORMAL DEPTH

DATE	REVISIONS

SCALE	FILE
NO SCALE	SHALLOWSEWERLTR

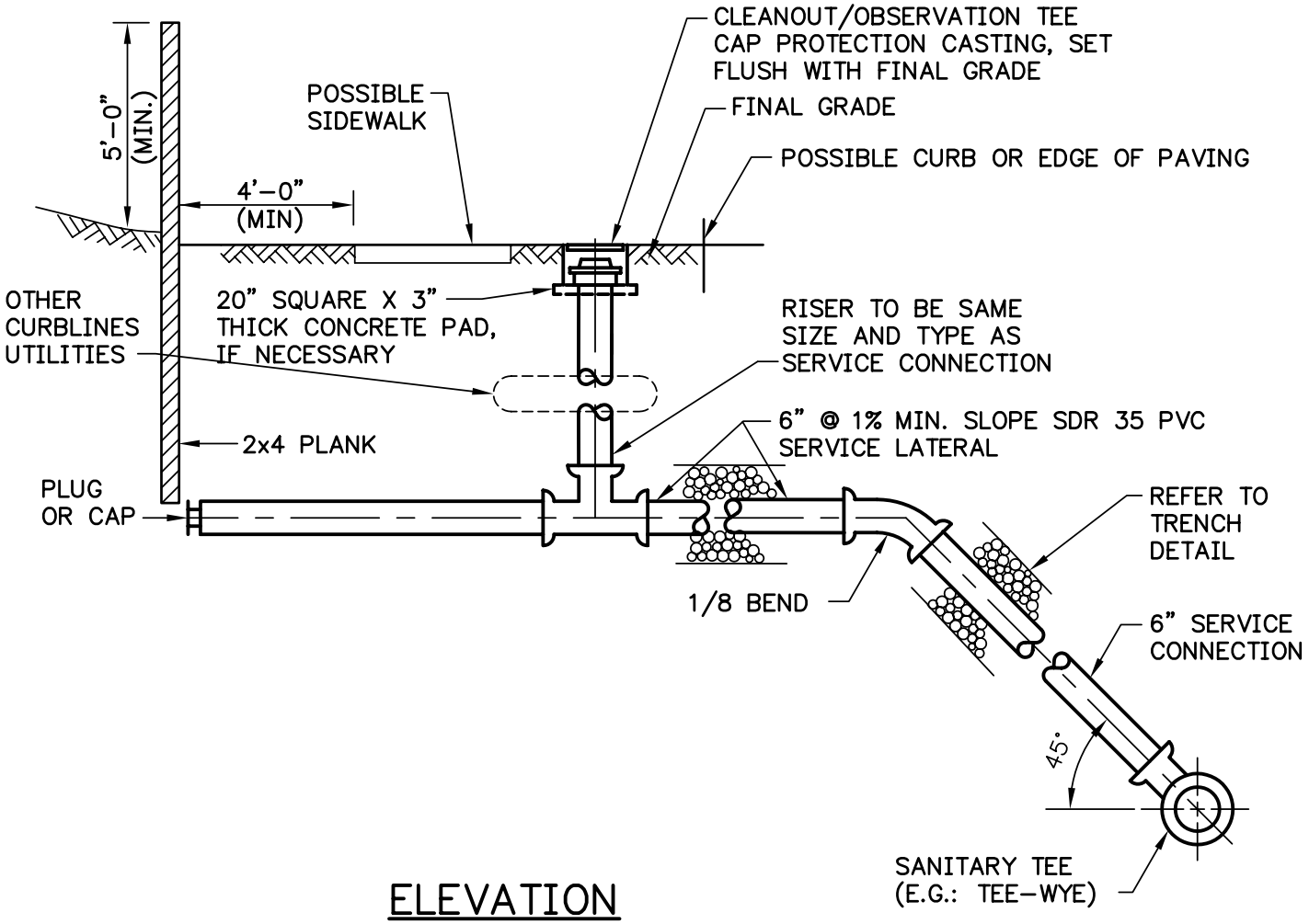

ELEVATION

NOTES:

1. CURB CLEANOUT NOT TO BE LOCATED IN SIDEWALK OR BENEATH OTHER CURBLINE UTILITIES.

SERVICE LATERAL – DEEP SEWER

DATE	REVISIONS

SCALE	FILE
NO SCALE	SERCONDEPLTR

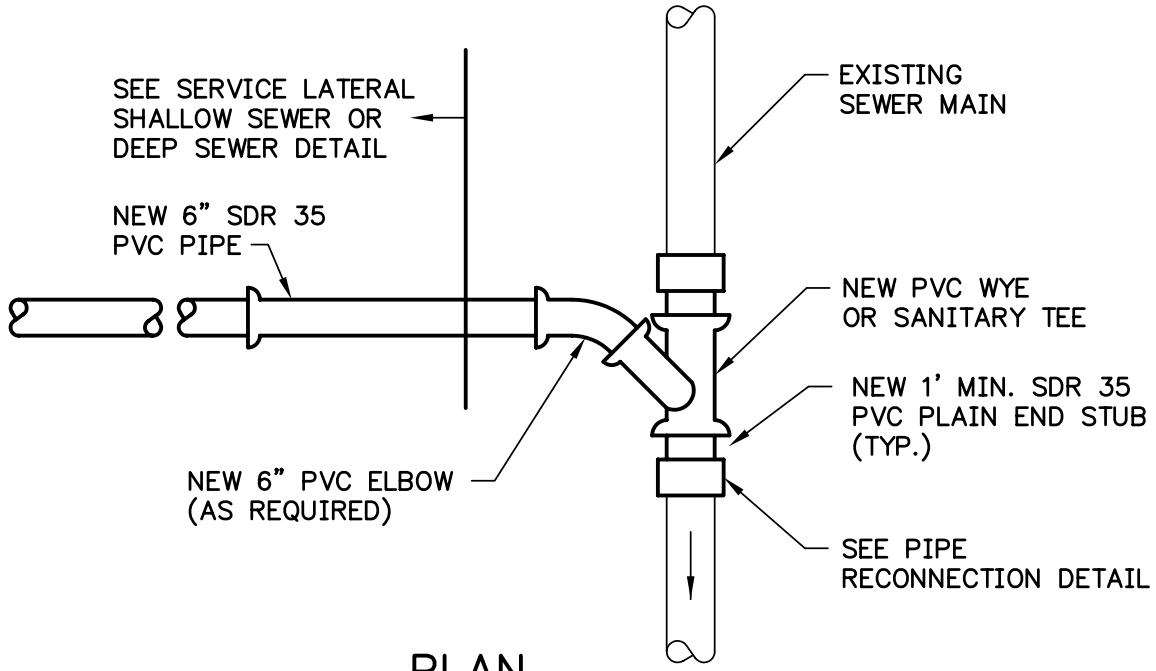

PLAN

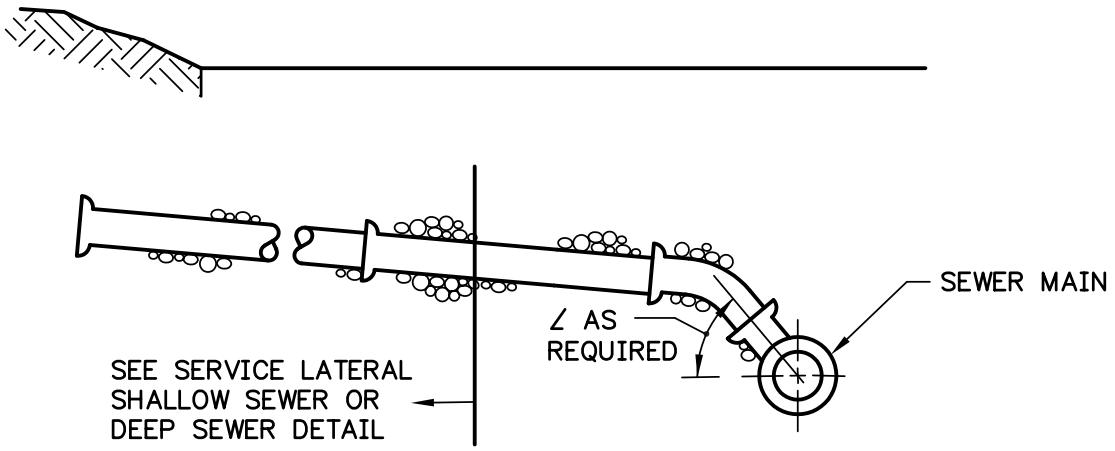

ELEVATION

NOTES:

1. EXISTING MAIN SEWER TO BE SAW CUT.

SERVICE LATERAL CONNECTION TO EXISTING SEWER MAIN

DATE	REVISIONS

SCALE	FILE
NO SCALE	SERLATERAL

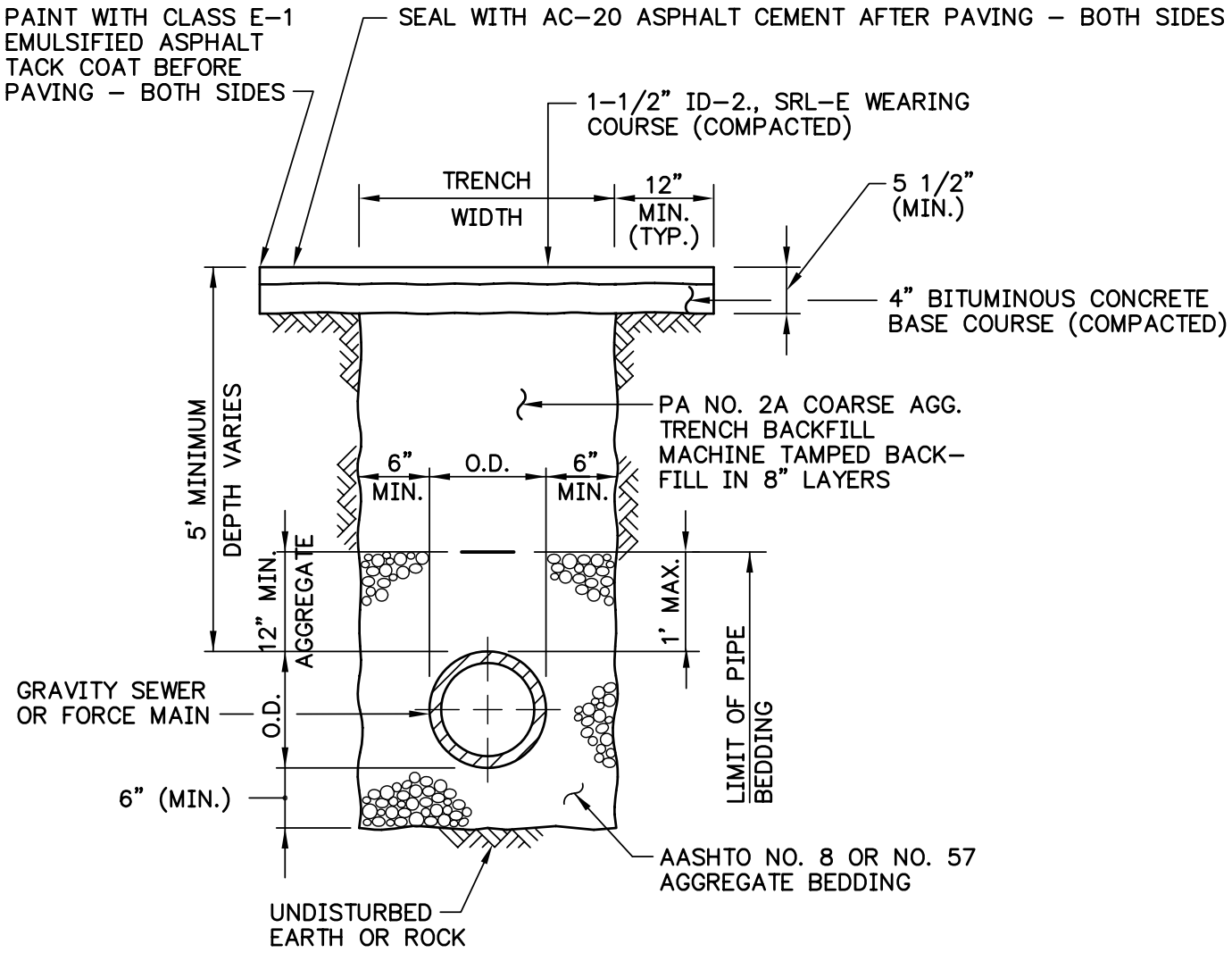

TOWNSHIP ROADS

NOTE

WHEN IN PAVED AREAS SUCH AS DRIVEWAYS OR PARKING LOTS, PAVING RESTORATION SHALL BE IN ACCORDANCE WITH CONTRACT DOCUMENTS.

TRENCH DETAIL IN PAVED AREAS

DATE	REVISIONS

SCALE	FILE
NO SCALE	TRENCH-PAVED

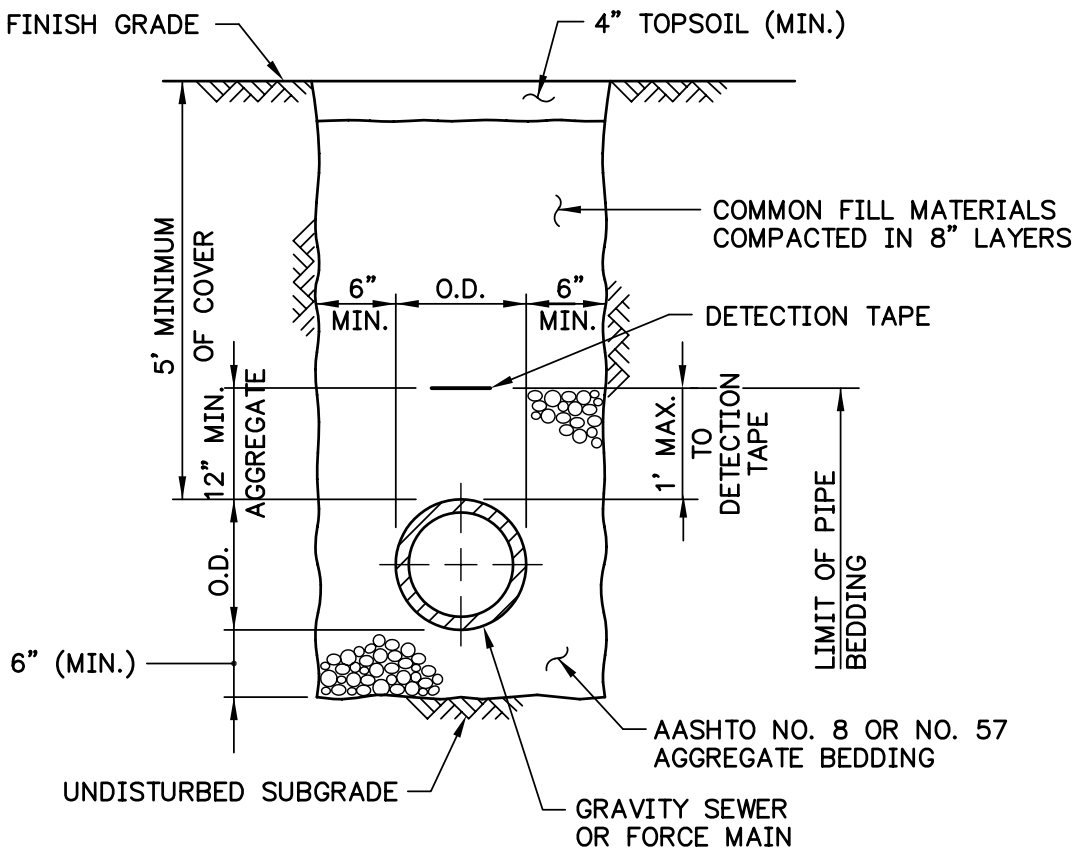

TRENCH DETAIL IN UNPAVED AREAS

DATE	REVISIONS

SCALE	FILE
NO SCALE	TRENCH-ROW

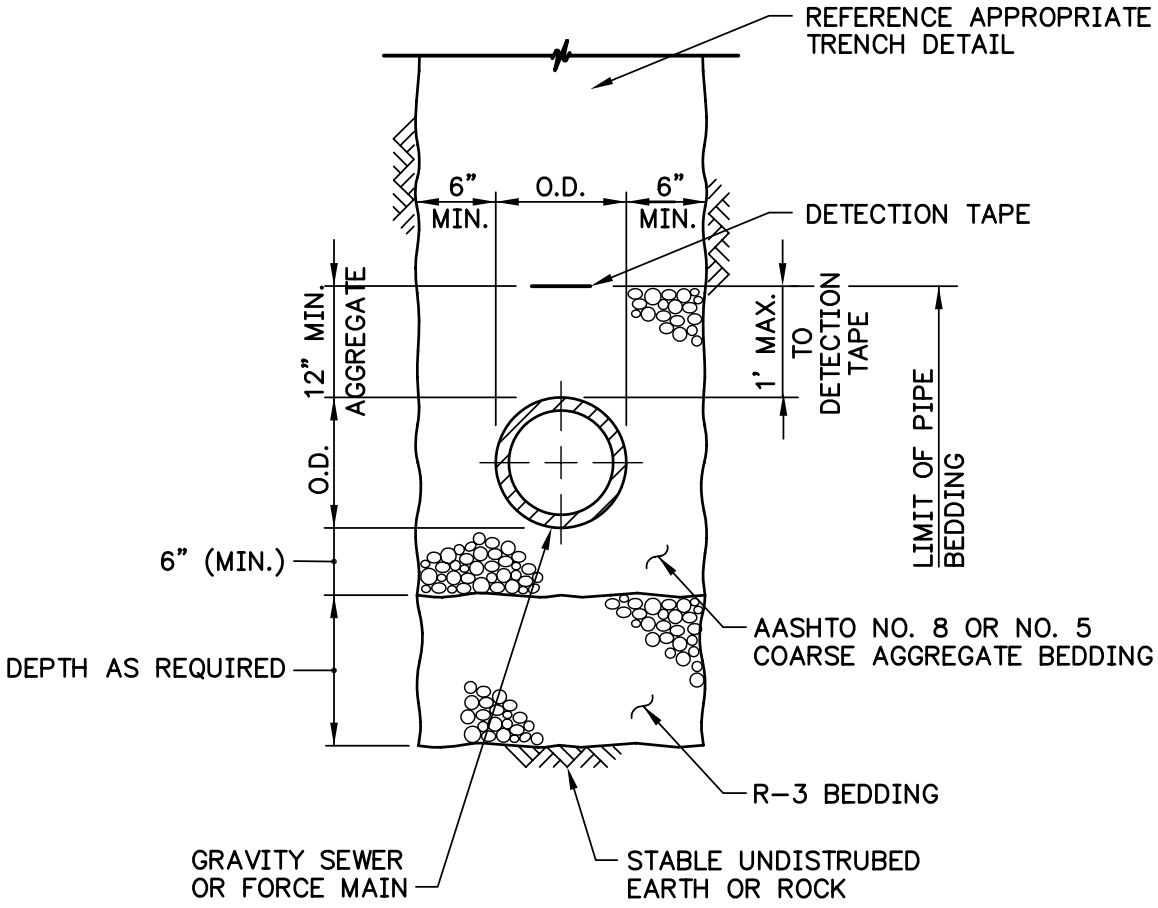

UNSUITABLE MATERIAL EXCAVATION

DATE	REVISIONS

SCALE	FILE
NO SCALE	TRENCH-UME

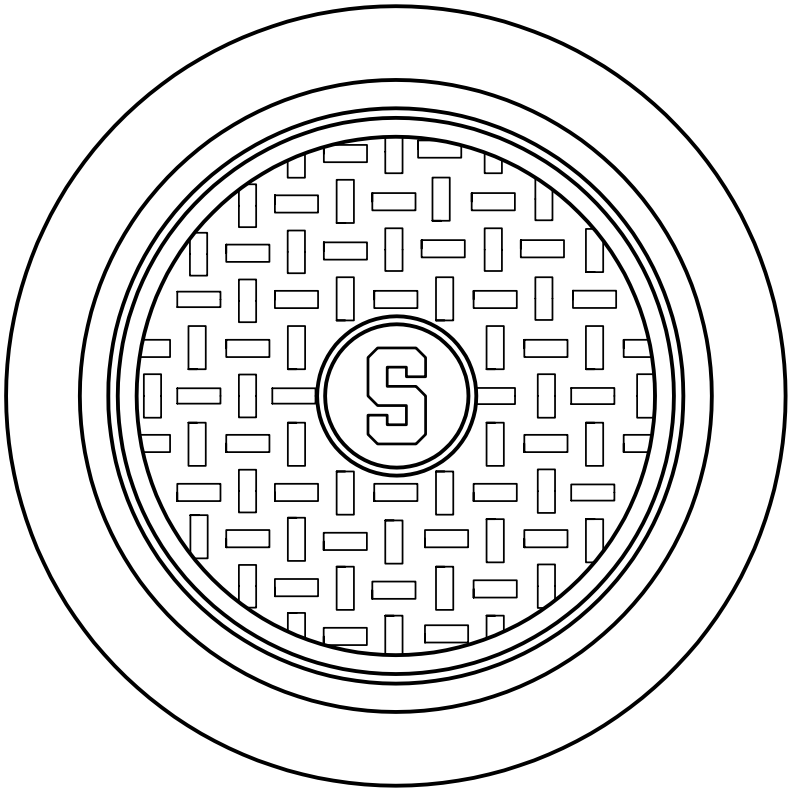

PLAN

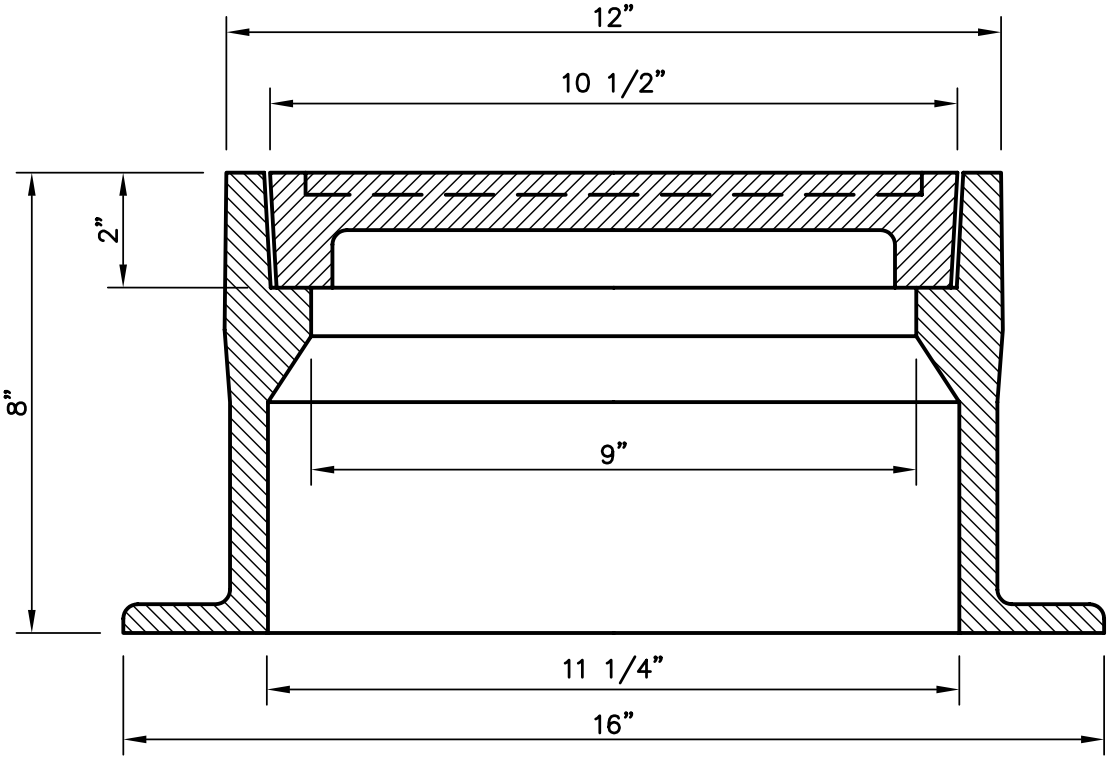

SECTION

CLEANOUT/TEST TEE
CAP PROTECTION CASTING

DATE	REVISIONS

SCALE	FILE
NO SCALE	CLNOUTTESTTEE

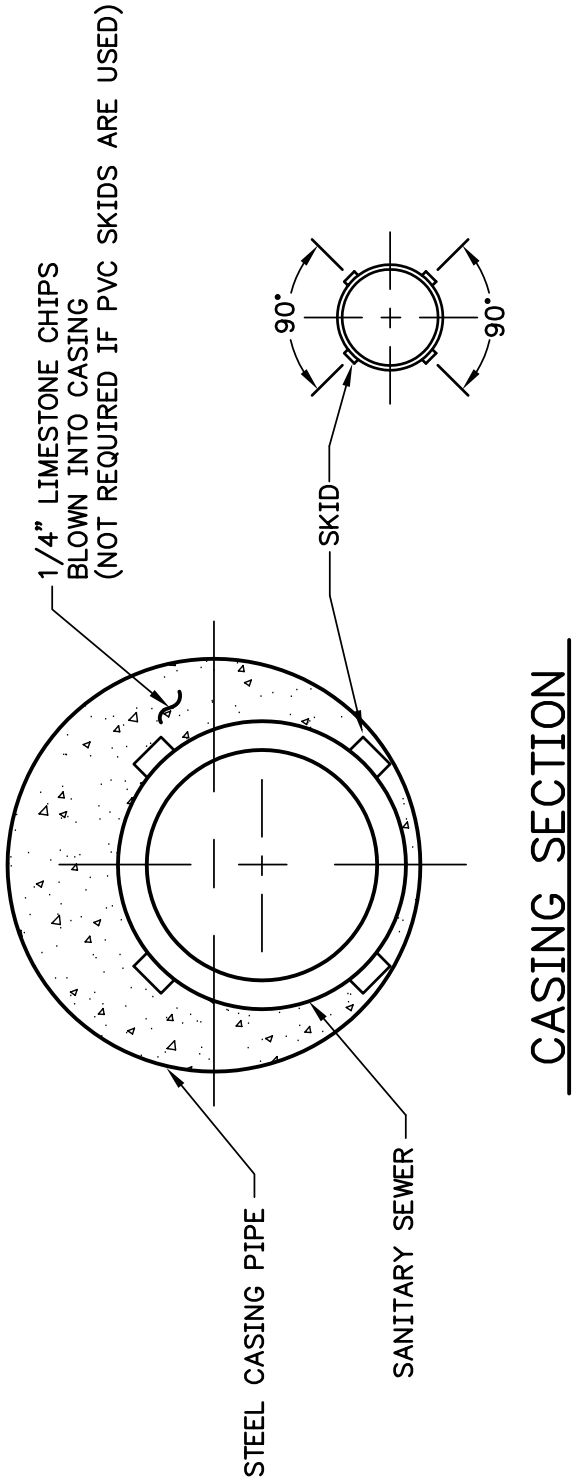

CASING SECTION

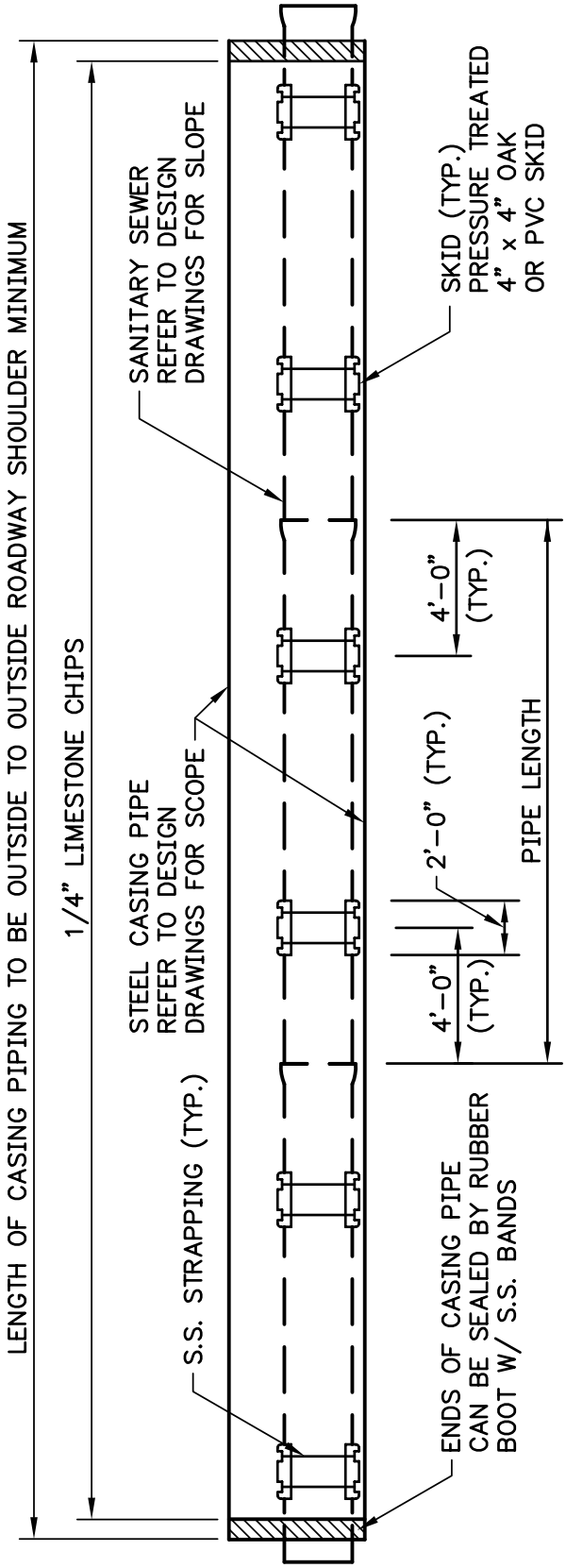

CASING ELEVATION

CASING DETAILS FOR PIPE BORINGS/TUNNELS

DATE	REVISIONS

SCALE	FILE
NO SCALE	CASINGDETAILS

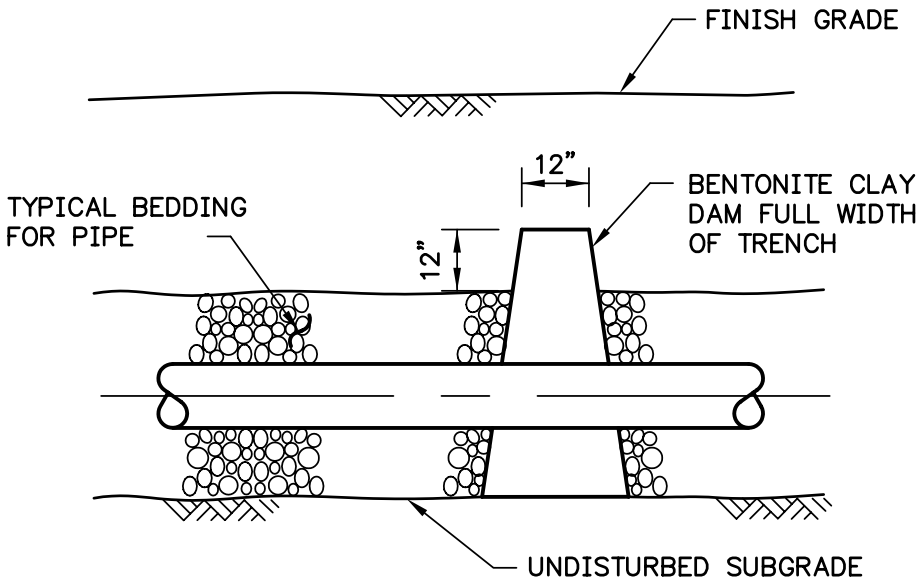

BENTONITE CLAY DAM DETAIL

DATE	REVISIONS

SCALE	FILE
NO SCALE	CLAYDETAIL

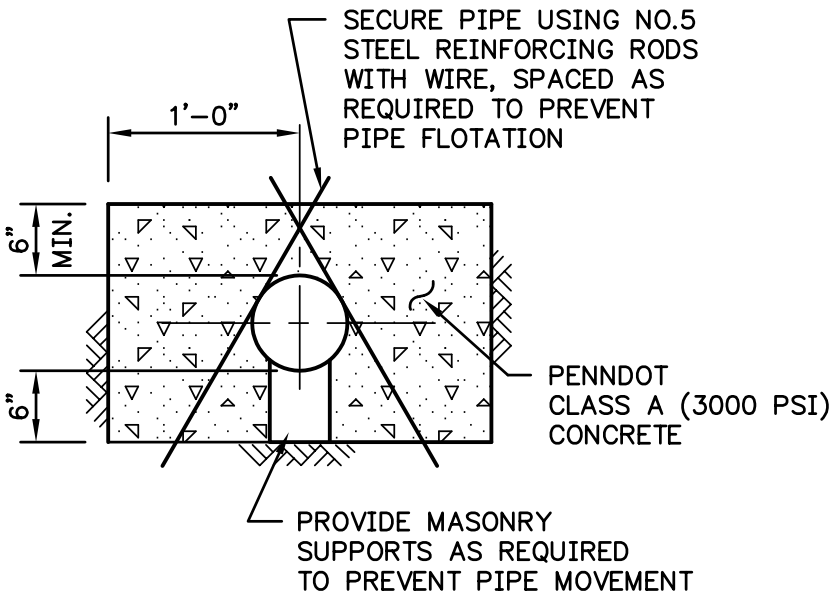

CONCRETE ENCASEMENT DETAIL

DATE	REVISIONS

SCALE	FILE
NO SCALE	CONCENC

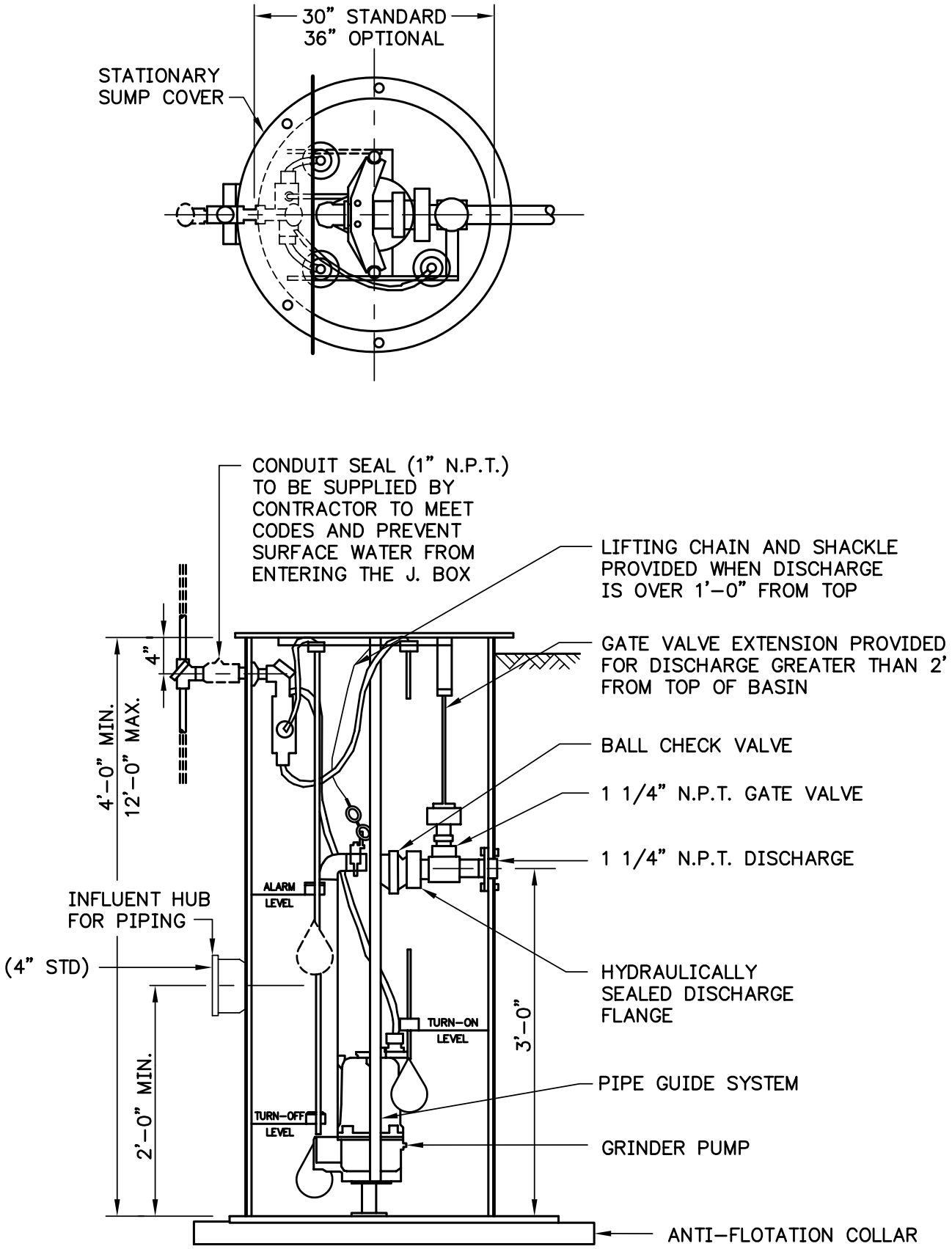

SIMPLEX SEWAGE GRINDER PUMP STATION

DATE	REVISIONS

SCALE	FILE
NO SCALE	GRINDERPUMP

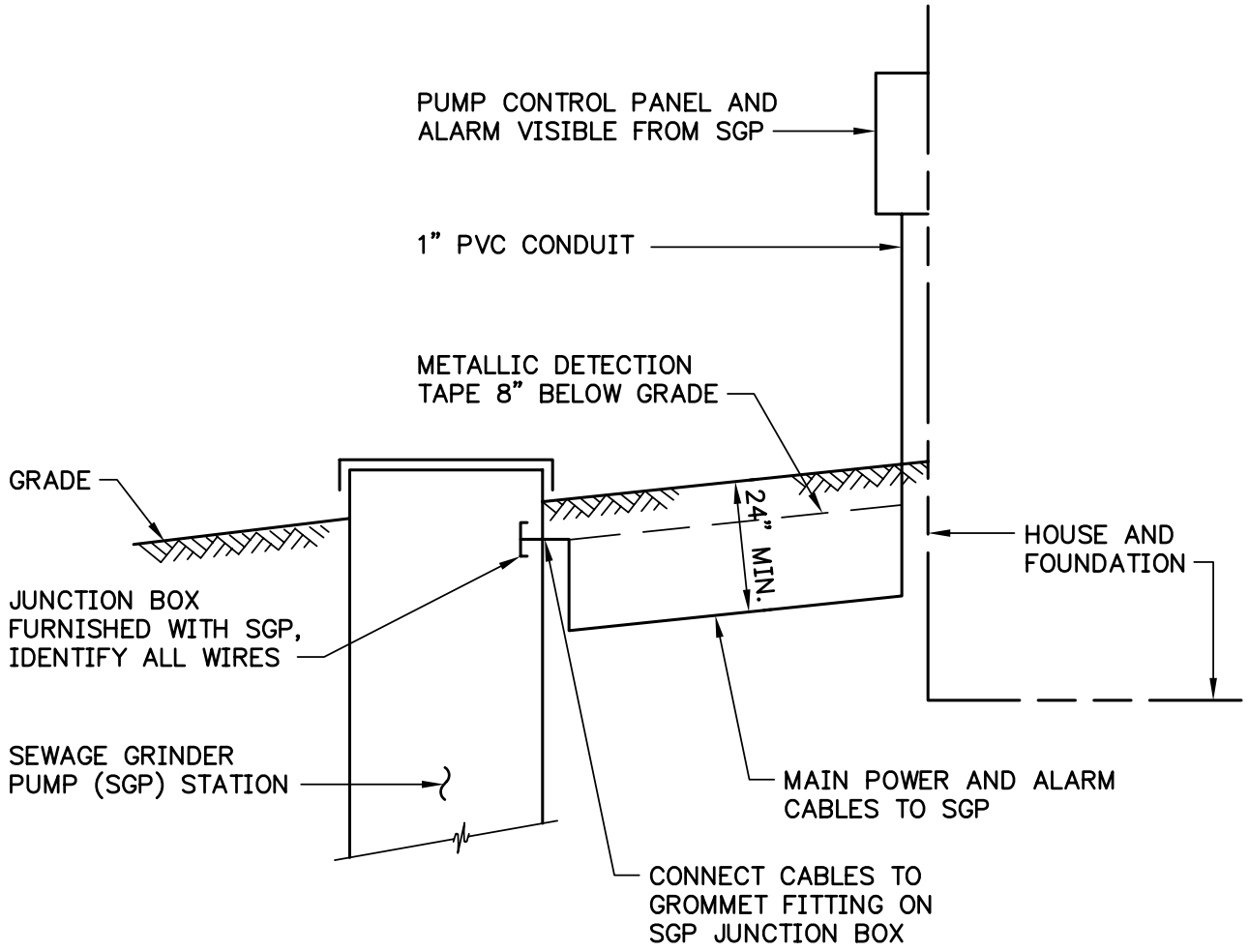

TYPICAL ELECTRICAL LAYOUT

DATE	REVISIONS

SCALE	FILE
NO SCALE	TYPELEC